IP67

RoHS Compliant

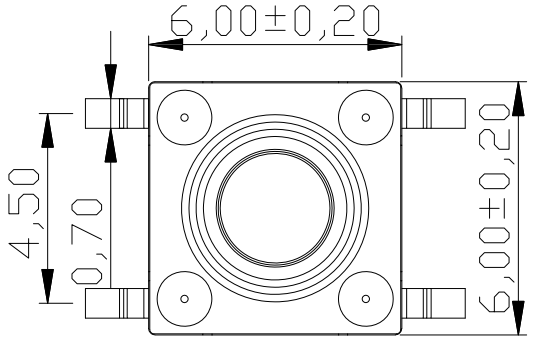

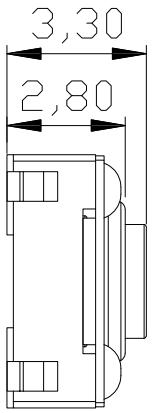

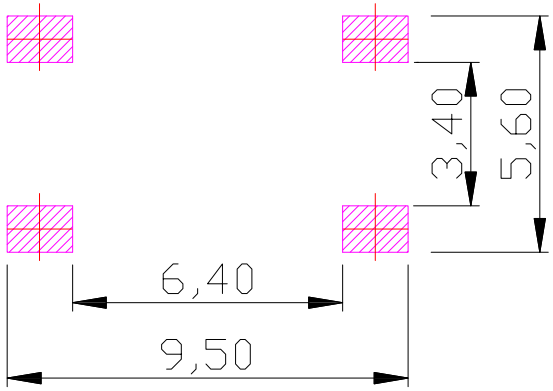

P.C.B MOUNTING PATTERN DIMENSION

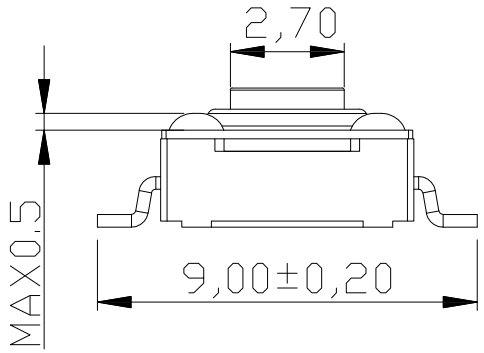

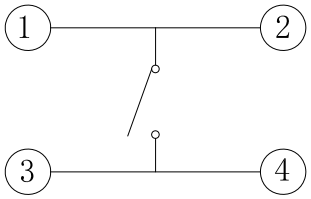

CIRCUIT DIAGRAM

SPECIFICATIONS

Rating	DC 12V 50mA Max.			
Contact Resistance	50mΩ Max.			
Travel	0.30 ± 0.10 mm			
Operating Force	2	160 ± 50gf	3	250 ± 50gf
Operating Life (cycles)	100,000			

NO.	DESCRIPTION	QTY	MATERIAL	PLATING
F	TERMINAL	4	BRASS	Ag plated
E	BASE	1	PPA(BLACK)	
D	CONTACT	1	SUS	Ag plated
C	FILM	1	POLYAMIDE	
B	COVER	1	SUS	
A	STEM	1	PPA(BLACK)	

ITEM NO.	DESCRIPTION	DRAWN	DATE

CONTACT 建倚科技股份有限公司 CONTACT TECHNOLOGY CORP.

TOLERANCE UNLESS OTHERWISE STATED : Up to 5 ±0.2; Above 5 ~ 15 ±0.3; Above 15 ~ 30 ±0.4; Above 30 ~ 50 ±0.5; Angle ±0.3°

3RD. ANGEL'S

UNITS MM

DRAWN BY: Jack Lu	DATE 07/01/21	MAT'L		TITLE	SWITCH		
CHECKED BY: Jacky Chen	DATE 07/01/21	FINISH		MODLE	TACT SWITCH 6X6 SMT WATERPROOF TYPE		
APPROVED BY: Tony Kao	DATE 07/01/21	SCALE	1 : 1	DWG NO.	TS-A67W-x-S428	SIZE	A4
		SHEET NO.	1 of 1	PART NO.	TS-A67W-x-S428	VER	R