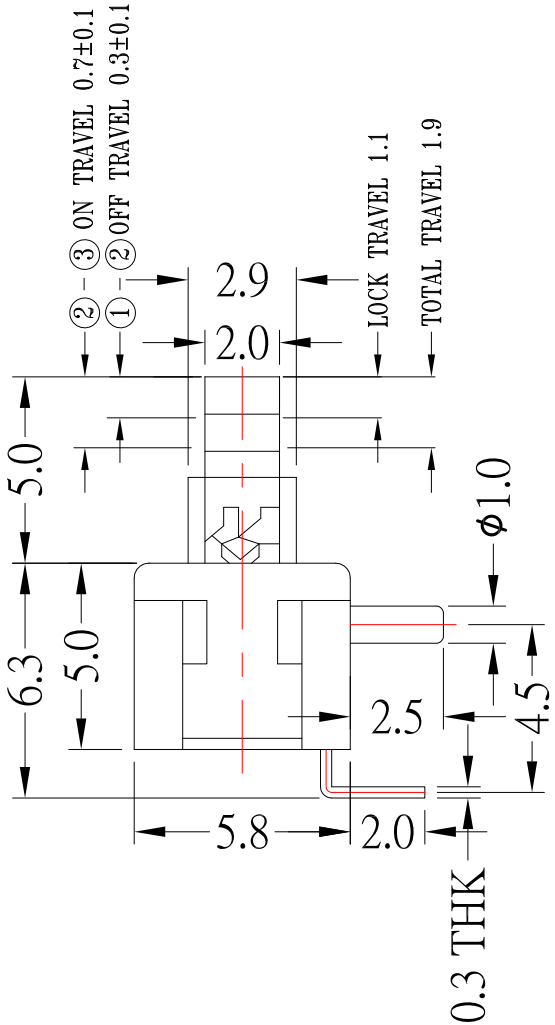


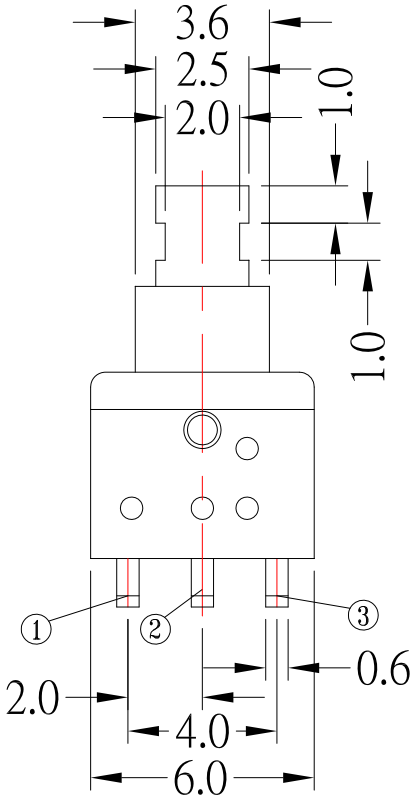


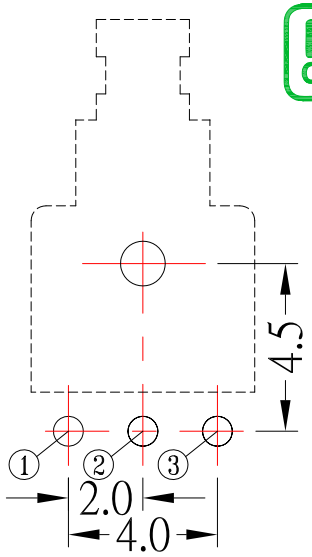


P.C.B. LAYOUT
BOTTOM VIEW

OPERATING MODE : SELF-LOCK : PS-D16H-S191

NON-LOCK : PS-D16HN-S191

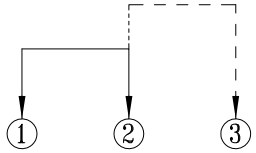


SCHEMATIC (NON SHORTING)

| NO. | PARTS | MATERIALS | Q'TY | FINISH |
|---|---|---|---|---|
| 7 | CAM STICK | SUS | 1 | NATURAL |
| 6 | CONTACT | PHOSPHOR BRONZE | 1 | Ag Plated |
| 5 | SPRING | SUS | 1 | NATURAL |
| 4 | TERMINAL | BRASS | 3 | Ag Plated |
| 3 | COVER | PA66 | 1 | BLACK |
| 2 | CASE | PA66 | 1 | GREY |
| 1 | KNOB | PBT | 1 | WHITE |

| ITEM NO. | DESCRIPTION | DRAWN | DATE |
|---|---|---|---|
| 6 | 更新圖面 | Jack | 031523 |
| 5 | 更新材質 | Jack | 120921 |
| 4 | 更新材質 | Jack | 112718 |
| 3 | 更新SPEC | Jack | 111815 |
| 2 | 新增pcb layput孔徑尺寸 | Jack | 072215 |
| 1 | 更新Contact Resistance | Jack | 010615 |

CONTACT 建倚科技股份有限公司
CONTACT TECHNOLOGY CORP.

TOLERANCE UNLESS OTHERWISE STATED : Up to 5 ±0.2; Above 5 ~ 15 ±0.3; Above 15 ~ 30 ±0.4; Above 30 ~ 50 ±0.5; Angle ±0.3°

3RD. ANGEL'S | UNITS MM

| | | | | | |
|---|---|---|---|---|---|
| DRAWN BY: Jack Lu | DATE 03/15/23 | MAT'L | | TITLE | SWITCH |
| CHECKED BY: Jacky Chen | DATE 03/15/23 | FINISH | | MODLE | PUSH SWITCH |
| APPROVED BY: Tony Kao | DATE 03/15/23 | SCALE | 1 : 1 | DWG NO. | PS-D16Hx-S191 |
| | | SHEET NO. | 1 of 1 | PART NO. | PS-D16Hx-S191 |

SIZE A4 | VER R6