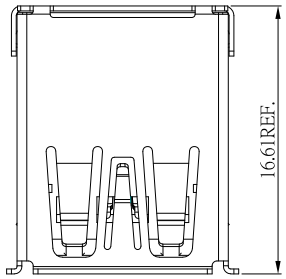

SUA-110H29-30x-S277

鍍層厚度：

Blank : 1u"
2 : 15u"
3 : 30u"

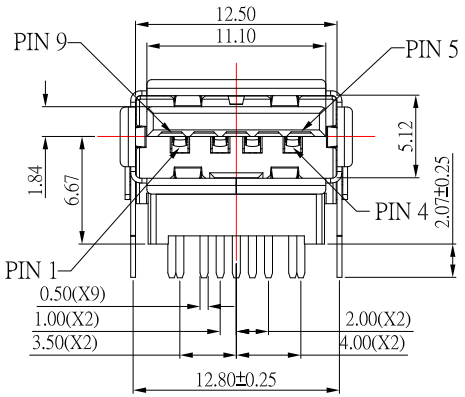

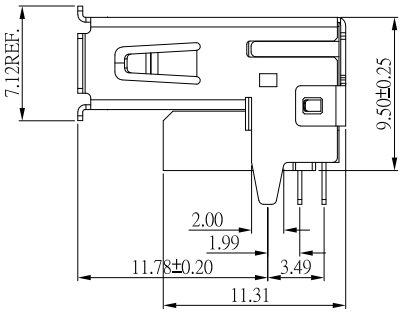

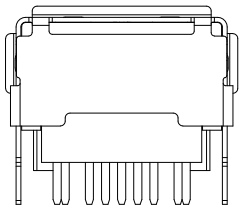

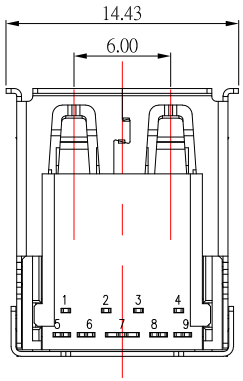

Pin #	SIGNAL NAME	DESCRIPTION	
1	VBUS	POWER	
2	D−	USB 2.0 DIFFERENTIAL PAIR	
3	D+		
4	GND	GROUND FOR POWER RETURN	
5	StdA_SSRX-	SUPERSPEED RECEIVER DIFFERENTIAL PAIR	
6	StdA_SSRX+		
7	GND_DRAIN	GROUND FOR SIGNAL RETURN	
8	StdA_SSTX-	SUPERSPEED TRANSMITTER DIFFERENTIAL PAIR	
9	StdA_SSTX+		
Shell	Shield	CONNECTOR METAL SHELL	

RoHS Compliant

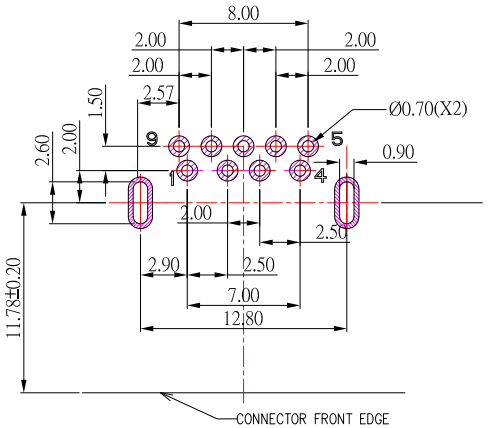

PCB LAYOUT

SPECIFICATIONS

Electrical:

1.Rating: 1.5A

2.Contact Resistance: 30 mΩ Max

3.Insulation Resistance: 100 MΩ Min

4.Dielectric Withstanding Voltage: 100V AC

5.Insertion Force: 35N

6.Extraction Force: 10N

MATERIAL

1.Housing: PA9T

2.Contact: PHOSPHOR BRONZE(4 PIN)
BRASS(5 PIN)

3.Shell: SUS

Finish:

1.Contact: Plated Gold in Mating Area ;
Tin Plated on Solder Balls
Nickel under plated overall

2.Shell: Nickel under Plated surface layer

ITEM NO.	DESCRIPTION	DRAWN	DATE

CONTACT 建倚科技股份有限公司
CONTACT TECHNOLOGY CORP.

TOLERANCE UNLESS OTHERWISE STATED : Up to 5 ±0.2; Above 5 ~ 15 ±0.3; Above 15 ~ 30 ±0.4; Above 30 ~ 50 ±0.5; Angle ±0.3°

3RD. ANGEL'S | UNITS | MM

DRAWN BY: Jack Lu	DATE 04/29/26	MAT'L	
CHECKED BY: Jacky Chen	DATE 04/29/26	FINISH	
APPROVED BY: Tony Kao	DATE 04/29/26	SCALE	1 : 1
		SHEET NO.	1 of 1

TITLE	CONNECTOR
MODLE	USB AF 3.0 墊高H9.5mm L16.6mm
DWG NO.	SUA-110H29-30x-S277
PART NO.	SUA-110H29-30x-S277
SIZE	A4
VER	R