RoHS Compliant

SBC-240S49-43x-S338

鍍層厚度 :

Blank : 1u"
2 : 15u"
3 : 30u"

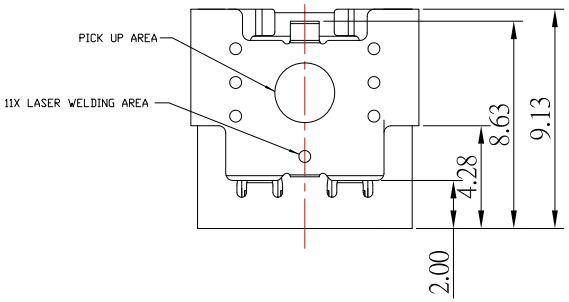

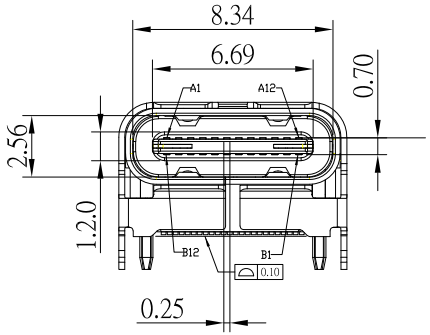

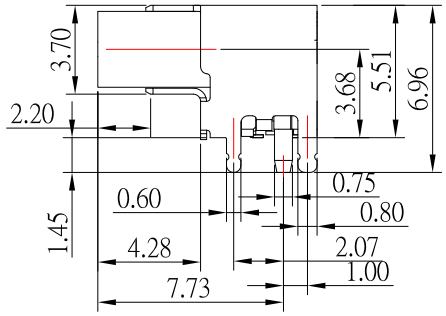

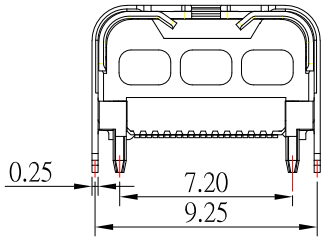

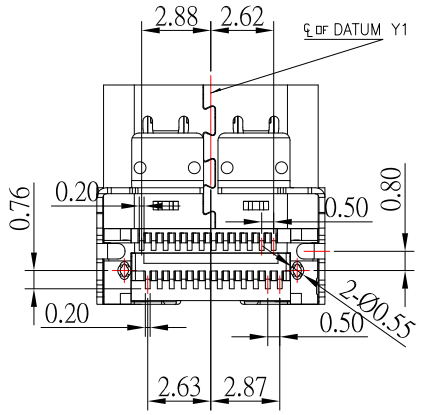

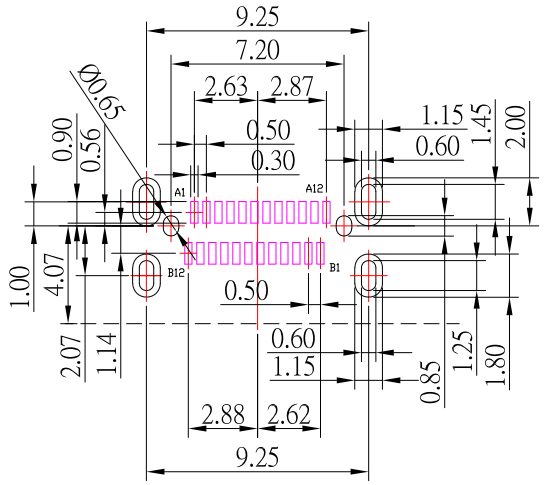

P.C.B LAYOUT

TABLE 2:CONNECTOR PIN ASSIGNMENTS

PIN NUMBER	SIGNAL NAME	PIN NUMBER	SIGNAL NAME
A1	GND	B12	GND
A2	SSTXp1	B11	SSRXp1
A3	SSTXn1	B10	SSRXn1
A4	VBUS	B9	VBUS
A5	CC1	B8	SBU2
A6	Dp1	B7	Dn2
A7	Dn1	B6	Dp2
A8	SBU1	B5	CC2
A9	VBUS	B4	VBUS
A10	SSRXn2	B3	SSTXn2
A11	SSRXp2	B2	SSTXp2
A12	GND	B1	GND

SPECIFICATIONS

Electrical:

1. Rating: 20V , 5.0A
2. Contact Resistance: 40 mΩ Max
3. Insulation Resistance: 100 MΩ Min
4. Dielectric Withstanding Voltage: 100V AC

Mechanical:

1. Connector Mate and Unmate Force
   - 1.1 Mate force: 5~20 N
   - 1.2 Unmate force: 8~20 N

Material:

1. Housing: LCP
2. Contact: C7025
3. Shell: SUS

Finish:

1. Contact: Plated Gold in Mating Area ; Gold Plated on Solder Balls ; Nickel under plated overall
2. Shell: Nickel under Plated surface layer

ITEM NO.	DESCRIPTION	DRAWN	DATE

CONTACT 建倚科技股份有限公司
CONTACT TECHNOLOGY CORP.

TOLERANCE UNLESS OTHERWISE STATED :
Up to 5 ±0.2
Above 5 ~ 15 ±0.3
Above 15 ~ 30 ±0.4
Above 30 ~ 50 ±0.5
Angle ±0.3°

3RD. ANGEL'S | UNITS | MM

DRAWN BY: Jack Lu	DATE 03/31/25	MAT'L	
CHECKED BY: Jacky Chen	DATE 03/31/25	FINISH	
APPROVED BY: Tony Kao	DATE 03/31/25	SCALE 1 : 1	SHEET NO. 1 of 1

TITLE	CONNECTOR		
MODLE	USB 4.0 TYPE C 母座板上 L9.13 板上墊高 CL 3.68mm 外殼腳長1.45 GEN 2X2 20G		
DWG NO.	SBC-240S49-43x-S338	SIZE	A4
PART NO.	SBC-240S49-43x-S338	VER	R