RoHS Compliant

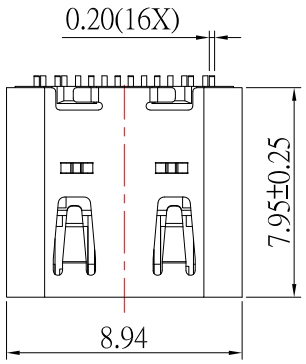

SBC-160S18-20x-S410

鍍層厚度 :

Blank : 1u"
2 : 15u"
3 : 30u"

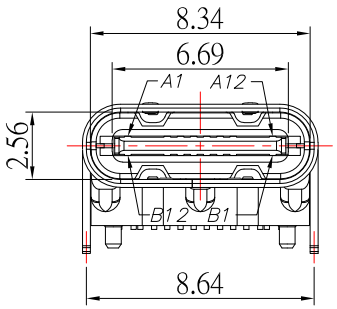

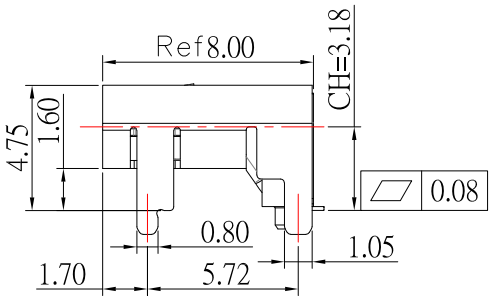

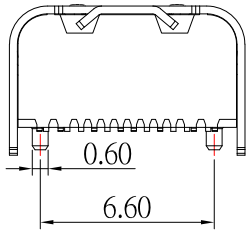

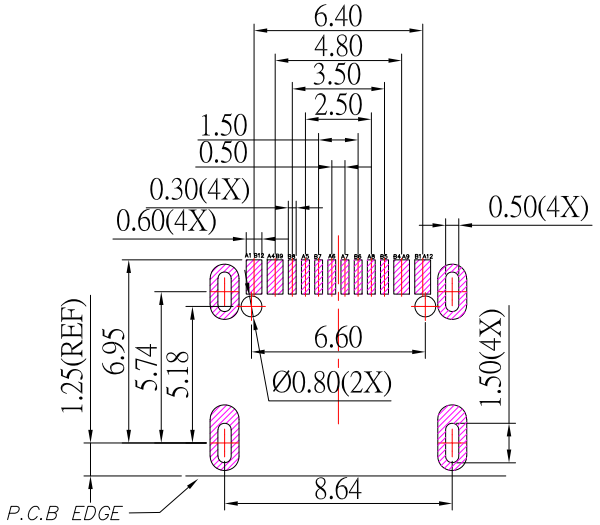

P.C.B. LAYOUT

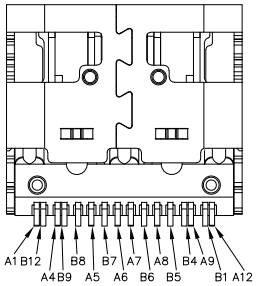

USB TYPE-C PIN ASSIGNMENTS

PIN NUMBER	SIGNAL NAME	PIN NUMBER	SIGNAL NAME
A1	GND	B12	GND
A4	VBUS	B9	VBUS
A5	CC1	B8	SBU2
A6	Dp1	B7	Dn2
A7	Dn1	B6	Dp2
A8	SBU1	B5	CC2
A9	VBUS	B4	VBUS
A12	GND	B1	GND

SPECIFICATIONS

Electrical:

1.Rating: 5.0 A

2.VOLTAGE: 20V

3.Dielectric Withstand Voltage: 100V AC

4.Contact Resistance: 40 mΩ Max

5.Insulation Resistance: 100 MΩ Min

Mechanical:

1.Connector Mate and Unmate Force

1.1 Mate force: 5~20 N

1.2 Unmate force: 8~20 N

Material:

1.Housing: LCP

2.Contact: C7025

3.Shell: SUS

Finish:

1.Contact: Plated Gold in Mating Area ;
Tin Plated on Solder Balls ;
Nickel under plated overall

2.Shell: Nickel under Plated surface layer

ITEM NO.	DESCRIPTION	DRAWN	DATE

CONTACT 建倚科技股份有限公司
CONTACT TECHNOLOGY CORP.

TOLERANCE UNLESS OTHERWISE STATED :
Up to 5 ±0.2
Above 5 ~ 15 ±0.3
Above 15 ~ 30 ±0.4
Above 30 ~ 50 ±0.5
Angle ±0.3°

3RD. ANGEL'S | UNITS | MM

DRAWN BY: Jack Lu	DATE 07/17/24	MAT'L	
CHECKED BY: Jacky Chen	DATE 07/17/24	FINISH	
APPROVED BY: Tony Kao	DATE 07/17/24	SCALE	1 : 1
		SHEET NO.	1 of 1

TITLE	CONNECTOR
MODLE	USB 3.1 TYPE C 單排SMT墊高CH3.18 L 7.95mm
DWG NO.	SBC-160S18-20x-S410
PART NO.	SBC-160S18-20x-S410
SIZE	A4
VER	R