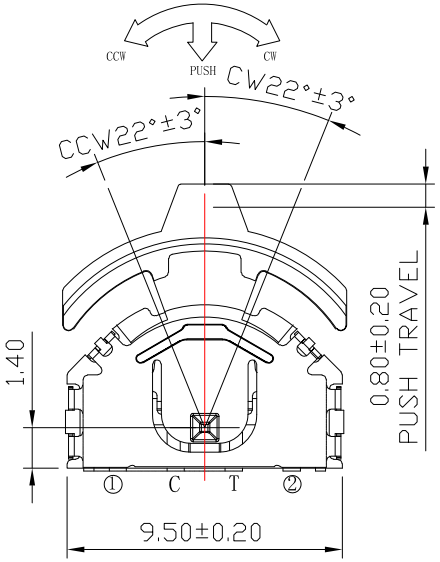

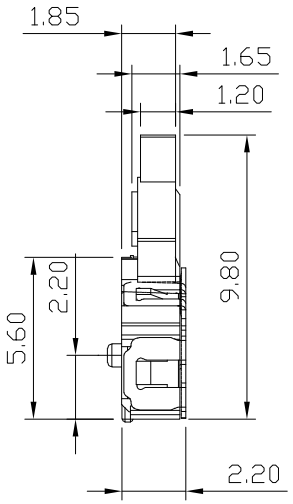

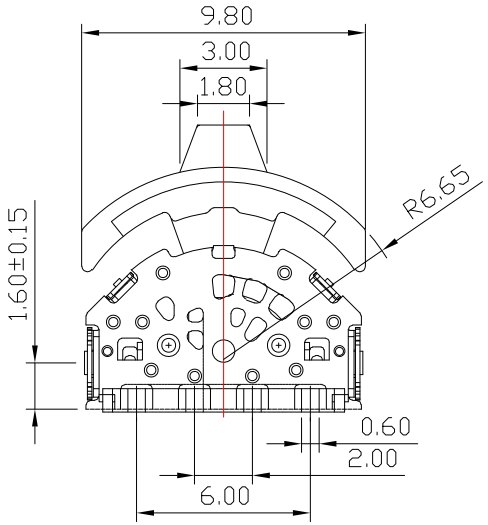

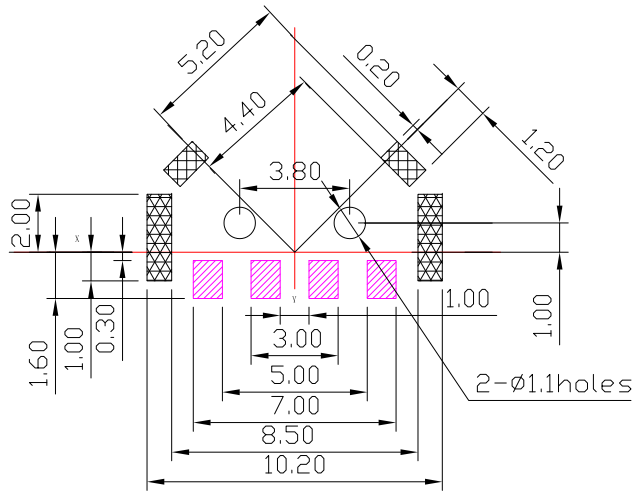

P.C.B LAYOUT

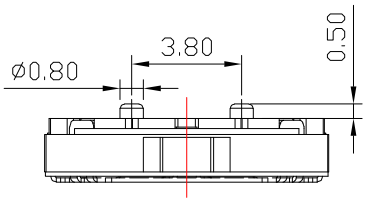

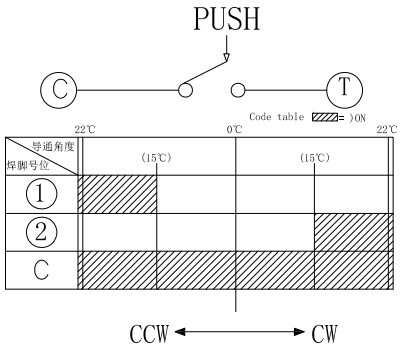

CIRCUIT

SPECIFICATIONS:

1. Operating temperature range:-10℃to+60℃
2. Rating:10mA.5V DC
3. Insulation resistance:100MΩ min.100V DC
4. Dielectric strength:100V AC for 1Min
5. Contact resistance:300mΩ Max
6. Life:500,000 Cycles
7. Travel:0.8±0.20mm
8. Operating force:300±100gf,80±50gf

ITEM NO.	DESCRIPTION	DRAWN	DATE

建倚科技股份有限公司
CONTACT TECHNOLOGY CORP.

TOLERANCE UNLESS OTHERWISE STATED: Up to 5 ±0.2; Above 5 ~ 15 ±0.3; Above 15 ~ 30 ±0.4; Above 30 ~ 50 ±0.5; Angle ±0.3°

3RD. ANGEL'S | UNITS MM

		DATE
DRAWN BY:	Jack Lu	02/27/25
CHECKED BY:	Jacky Chen	02/27/25
APPROVED BY:	Tony Kao	02/27/25

MAT'L		TITLE	SWITCH
FINISH		MODLE	LEVER PUSH SWITCH
SCALE	1 : 1	DWG NO.	K31-S410
SHEET NO.	1 of 1	PART NO.	K31-S410

SIZE A4 VER R