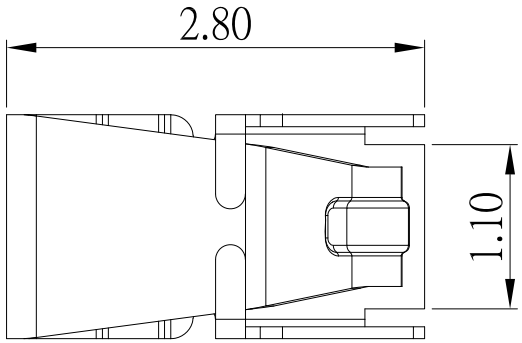

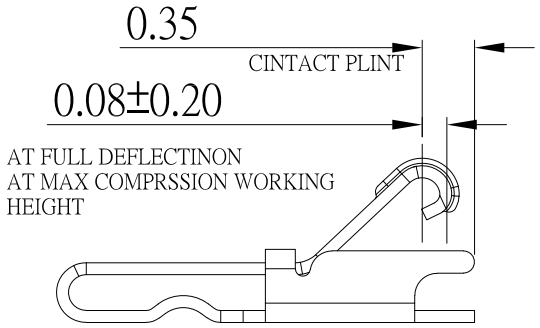

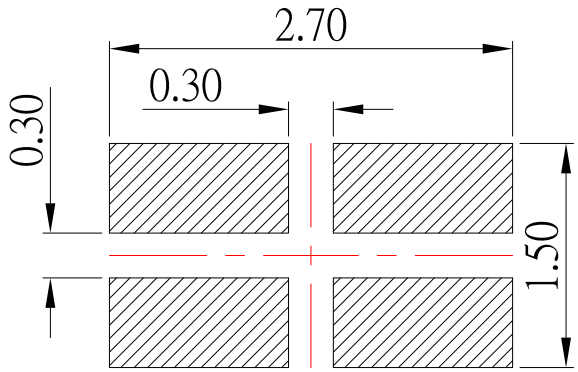

P.C.B LAYEOUT

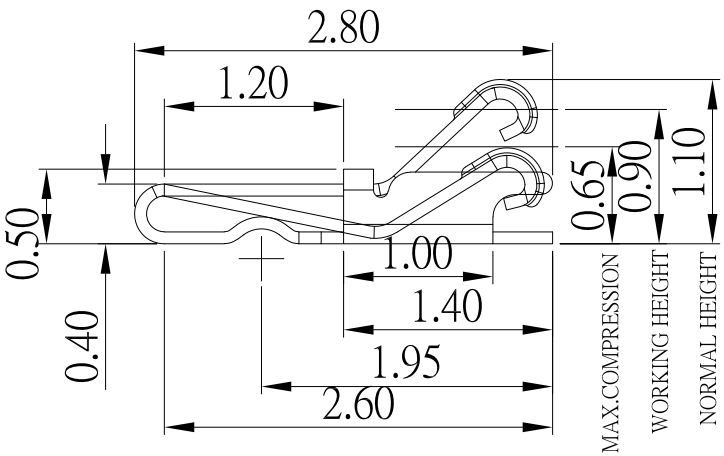

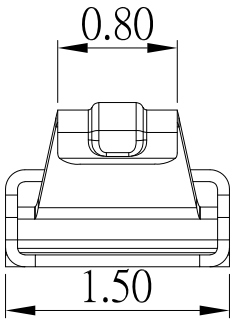

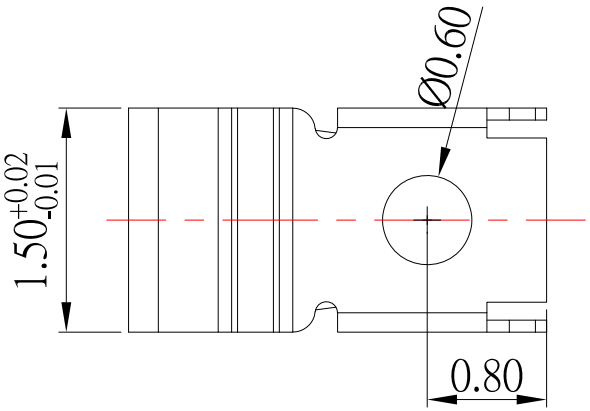

PRODUCT NO.

1. SPECIFICATIONS:
   - 1.1. CONTACT RESISTANCE:80 mΩ MAX
   - 1.2. VOLTAGE RATING:1.5V/AC/DC/MAX
   - 1.3. CURRENT RATING:1.0A/MAX
   - 1.4. PRE-LOAD FORCE:0.5±0.1N ON CONTACT POINT
   - 1.5. MAX.BEAM DEFLECTION:0.7±0.1N ON CONTACT POINT
   - 1.6. DURABILITY:2000 CYCLES
   - 1.7. OPERATING TEMPERATURE:-20°C~80°C
2. MATERIAL:
   - 2.1. STAINLESS STEEL
3. FINISH:
   - 3.1 NICKEL UNDERPLATING OVERALL

ITEM NO.	DESCRIPTION	DRAWN	DATE

CONTACT 建倚科技股份有限公司
CONTACT TECHNOLOGY CORP.

TOLERANCE UNLESS OTHERWISE STATED: Up to 5 ±0.2; Above 5 ~ 15 ±0.3; Above 15 ~ 30 ±0.4; Above 30 ~ 50 ±0.5; Angle ±0.3°

3RD. ANGEL'S | UNITS MM

DRAWN BY: Jack Lu	DATE 05/29/25	MAT'L	
CHECKED BY: Jacky Chen	DATE 05/29/25	FINISH	
APPROVED BY: Tony Kao	DATE 05/29/25	SCALE	1 : 1
		SHEET NO.	1 of 1

TITLE	CONNECTOR
MODLE	Antenna Spring Terminal SMT TYPE H:1.1mm
DWG NO.	AST-06-S486
PART NO.	AST-06-S486
SIZE	A4
VER	R