BC-A33FC-xx-S410

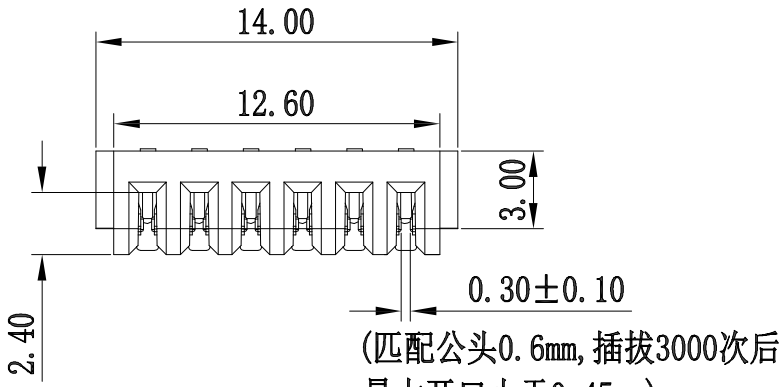

P/N:	dim.A	dim.B	dim.C	dim.D
03	8.00	6.60	4.00	7.40
04	10.00	8.60	6.00	9.40
05	12.00	10.60	8.00	11.40
06	14.00	12.60	10.00	13.40
07	16.00	14.60	12.00	15.40
08	18.00	16.60	14.00	17.40
09	20.00	18.60	16.00	19.40
10	22.00	20.60	18.00	21.40
11	24.00	22.60	20.00	23.40
12	26.00	24.60	22.00	25.40

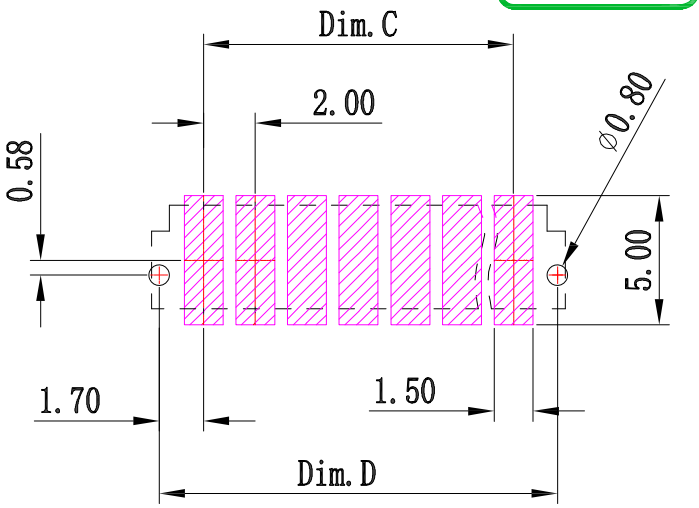

P.C.B LAYOUT

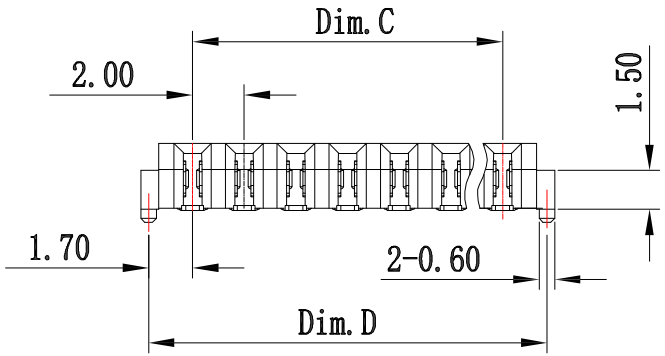

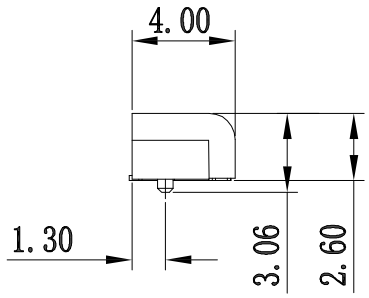

MATERIAL

INSULATOR : LCP
CONTACT : C5191
CONTACT PLATED : GOLD OVER NICKEL OR TIN

SPECIFICATION

VOLTAGERATING: 30VDC
CURRENT RATING : 7A/Pin
INSTANT CURRENT : 10A/Pin
CONTACT RESISTANCE : 20mΩ
INSULATION RESISTANCE : 100 MΩ Min.
DIELECTRIC VOLTAGE : 500V
OPERATING TEMPERATURE : -40° C~105° C

ITEM NO.	DESCRIPTION	DRAWN	DATE

CONTACT 建倚科技股份有限公司
CONTACT TECHNOLOGY CORP.

TOLERANCE UNLESS OTHERWISE STATED : Up to 5 ±0.2; Above 5 ~ 15 ±0.3; Above 15 ~ 30 ±0.4; Above 30 ~ 50 ±0.5; Angle ±0.3°
3RD. ANGEL'S
UNITS MM

		DATE
DRAWN BY:	Jack Lu	02/12/25
CHECKED BY:	Jacky Chen	02/12/25
APPROVED BY:	Tony Kao	02/12/25

MAT'L		TITLE	CONNECTOR
FINISH		MODLE	2.0mm BATTERY CONNECTOR FEMALE
SCALE	1 : 1	DWG NO.	BC-A33FC-xx-S410
SHEET NO.	1 of 1	PART NO.	BC-A33FC-xx-S410

SIZE A4 VER R