RoHS Compliant

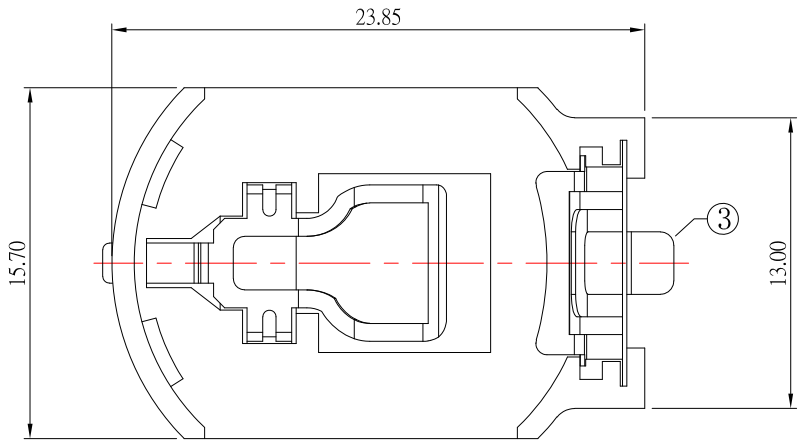

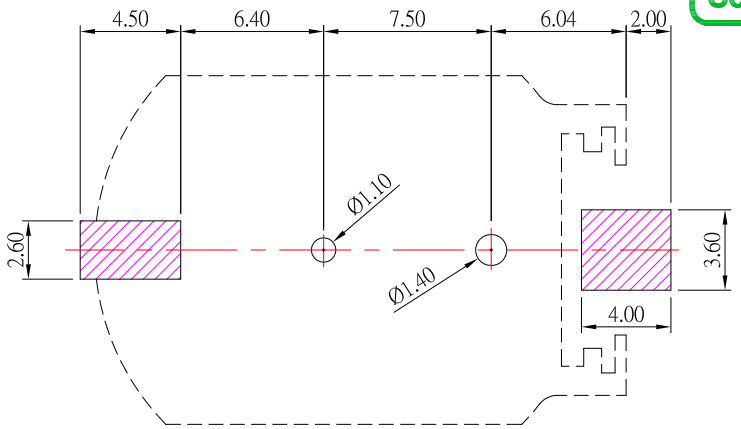

P. C. B LAYOUT
TOP VIEW

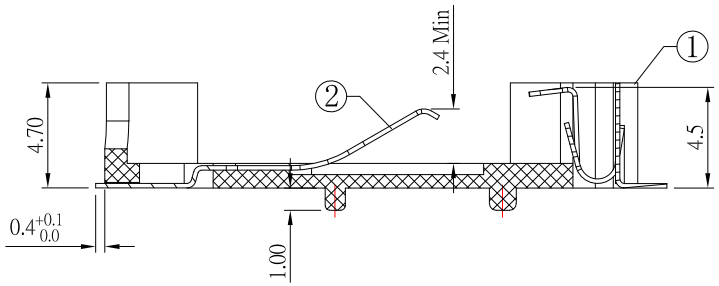

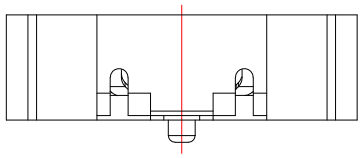

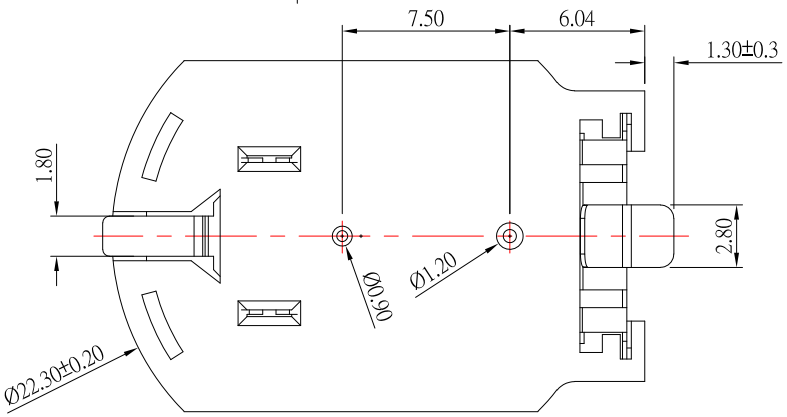

SPECIFICATION

1. Contact resistance: ≤30mΩ;

2. Insulation resistance: ≥100MΩ(DC500V);

3. Withstand voltage: 500VAC.

NO.	DESCRIPTION	QTY	MATERIAL	PLATING
3	CONTACT FOOT	1	PHOSPHOR BRONZE	Au-Plating
2	SPRING	1	PHOSPHOR BRONZE	Au-Plating
1	HOUSING	1	PA10T	

ITEM NO.	DESCRIPTION	DRAWN	DATE
4	更新材質	Jack	101824
3	更新樣式	Jack	112222
2	更新圖面	Jack	070522
1	更新圖面	Jack	070122

CONTACT 建倚科技股份有限公司
CONTACT TECHNOLOGY CORP.

TOLERANCE UNLESS OTHERWISE STATED :
Up to 5 ±0.2
Above 5 ~ 15 ±0.3
Above 15 ~ 30 ±0.4
Above 30 ~ 50 ±0.5
Angle ±0.3°

3RD. ANGEL'S | UNITS MM

DRAWN BY: Jack Lu	DATE 10/17/24	MAT'L	
CHECKED BY: Jacky Chen	DATE 10/17/24	FINISH	
APPROVED BY: Tony Kao	DATE 10/17/24	SCALE 1 : 1	SHEET NO. 1 of 1

TITLE	CONNECTOR		
MODLE	2032 電池座		
DWG NO.	BC-203203-S124	SIZE	A4
PART NO.	BC-203203-S124	VER	R4