IPX7

RoHS Compliant

SBC-WP160S3-20x-S412

鍍層厚度 :

Blank : 1u"
2 : 15u"
3 : 30u"

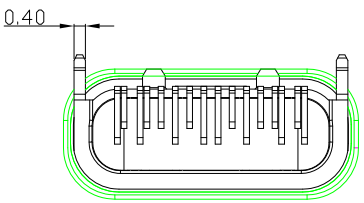

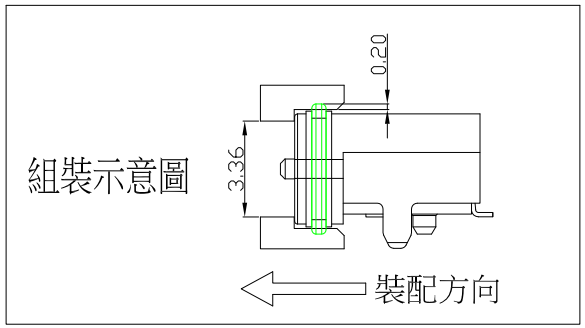

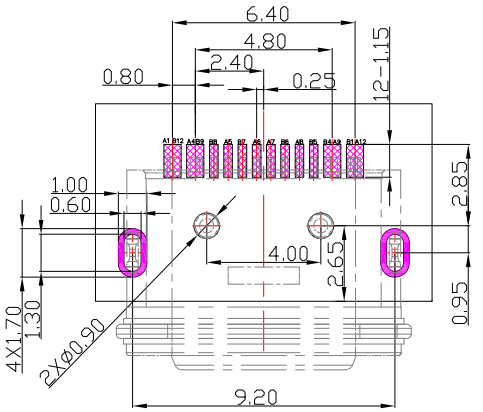

RECOMMENDED PCB LAYOUT

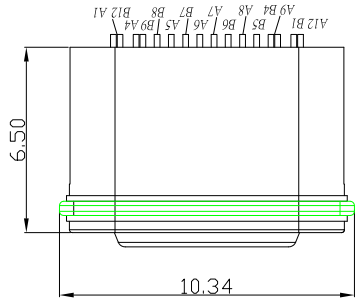

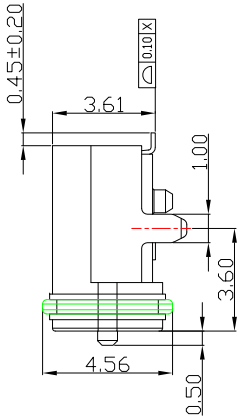

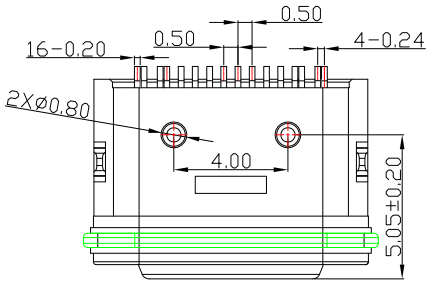

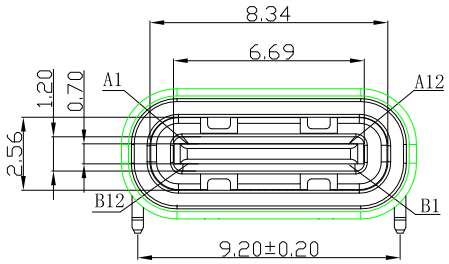

A1	GND	B12	GND
A4	VBUS	B9	VBUS
A5	CC1	B8	SBU2
A6	D+	B7	D−
A7	D−	B6	D+
A8	SBU1	B5	CC2
A9	VBUS	B4	VBUS
A12	GND	B1	GND
PIN	SIGNAL NAME	PIN	SIGNAL NAME

SPECIFICATIONS

Electrical:

1.Rating: 5.0 A

2.Contact Resistance: 40 mΩ Max

3.Insulation Resistance: 100 MΩ Min

4.Dielectric Withstand Voltage: 100V AC

Mechanical:

1.Connector Mate and Unmate Force

1.1 Mate force: 5~20 N

1.2 Unmate force: 8~20 N

Material:

1.Housing: LCP

2.Contact: C7025

3.Shell: SUS

Finish:

1.Contact: Plated Gold in Mating Area ;
Gold Plated on Solder Balls ;
Nickel under plated overall

2.Shell: Nickel under Plated surface layer

ITEM NO.	DESCRIPTION	DRAWN	DATE

CONTACT 建倚科技股份有限公司 CONTACT TECHNOLOGY CORP.

TOLERANCE UNLESS OTHERWISE STATED : Up to 5 ±0.2; Above 5 ~ 15 ±0.3; Above 15 ~ 30 ±0.4; Above 30 ~ 50 ±0.5; Angle ±0.3°

3RD. ANGEL'S | UNITS | MM

DRAWN BY: Jack Lu	DATE 05/22/23	MAT'L	
CHECKED BY: Jacky Chen	DATE 05/22/23	FINISH	
APPROVED BY: Tony Kao	DATE 05/22/23	SCALE 1 : 1	SHEET NO. 1 of 1

TITLE	CONNECTOR		
MODLE	USB C TYPE 2.0 Female 防水型 防水型IPX7		
DWG NO.	SBC-WP160S3-20x-S412	SIZE	A4
PART NO.	SBC-WP160S3-20x-S412	VER	R