

A1	GND	B12	GND
A4	VBUS	B9	VBUS
A5	CC1		
A6	DP1	B7	DN2
A7	DN1	B6	DP2
		B5	CC2
A9	VBUS	B4	VBUS
A12	GND	B1	GND
PIN	SIGNAL NAME	PIN	SIGNAL NAME

RoHS Compliant

SBC-140P3H-20x-S412

鍍層厚度 :

Blank : 1u"
2 : 15u"
3 : 30u"

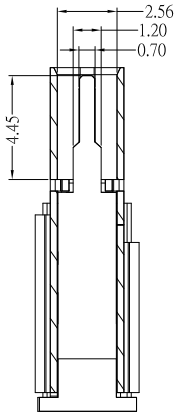

截面 2-2

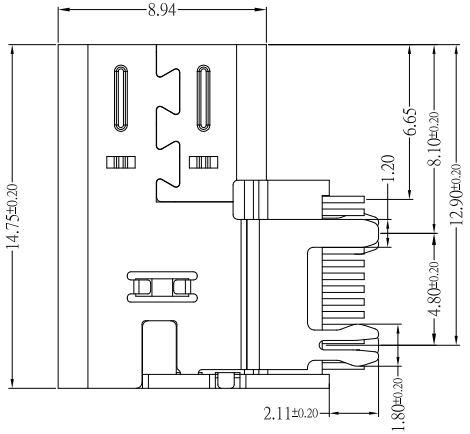

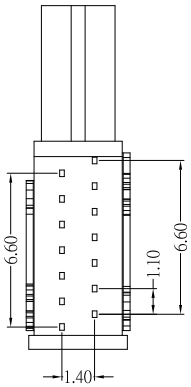

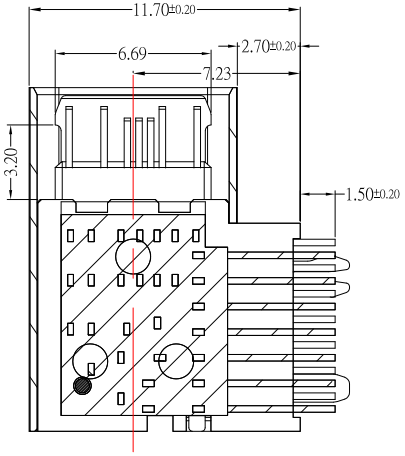

截面 3-3

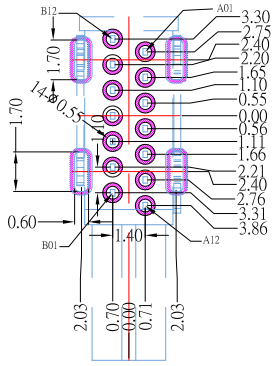

RECOMMENDED P.C.B. LAYOUT

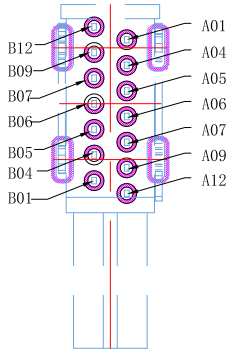

SPECIFICATIONS

Electrical:

1.Rating: 5.0 A

2.Dielectric Withstand Voltage: 100V AC

3.Contact Resistance: 40 mΩ Max

4.Insulation Resistance: 100 MΩ Min

Mechanical:

1.Connector Mate and Unmate Force

1.1 Mate force: 5~20 N

1.2 Unmate force: 8~20 N

Material:

1.Housing: LCP

2.Contact: C1814

3.Shell: SUS

Finish:

1.Contact: Plated Gold in Mating Area ;
Gold Plated on Solder Balls ;
Nickel under plated overall

2.Shell: Nickel under Plated surface layer

ITEM NO.	DESCRIPTION	DRAWN	DATE
2	更新樣式	Jack	061722
1	新增尺寸	Jack	102521

CONTACT 建倚科技股份有限公司
CONTACT TECHNOLOGY CORP.

TOLERANCE UNLESS OTHERWISE STATED : Up to 5 ±0.2; Above 5 ~ 15 ±0.3; Above 15 ~ 30 ±0.4; Above 30 ~ 50 ±0.5; Angle ±0.3°

3RD. ANGEL'S | UNITS MM

DRAWN BY: Jack Lu	DATE 06/17/22	MAT'L	
CHECKED BY: Jacky Chen	DATE 06/17/22	FINISH	
APPROVED BY: Tony Kao	DATE 06/17/22	SCALE 1 : 1	SHEET NO. 1 of 1

TITLE	CONNECTOR		
MODLE	USB 3.1 側插母座 14 PIN 墊高2.7 高導電銅		
DWG NO.	SBC-140P3H-20x-S412	SIZE	A4
PART NO.	SBC-140P3H-20x-S412	VER	R2