RoHS Compliant

SUA-110M9-32x-S277

鍍層厚度 :

Blank : 1u"
2 : 15u"
3 : 30u"

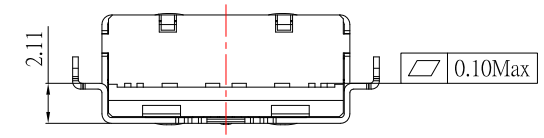

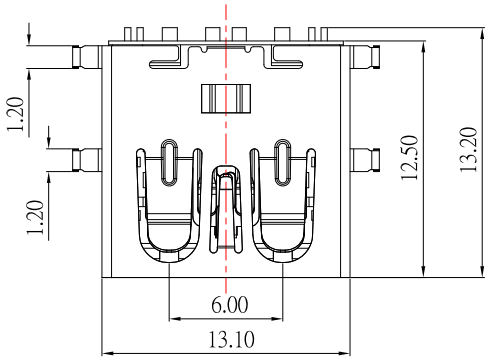

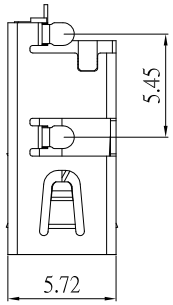

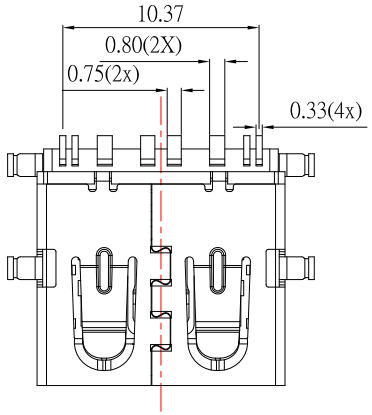

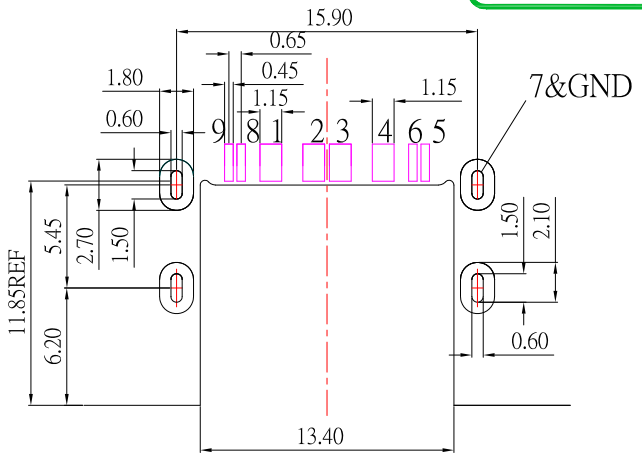

PCB LAYOUT

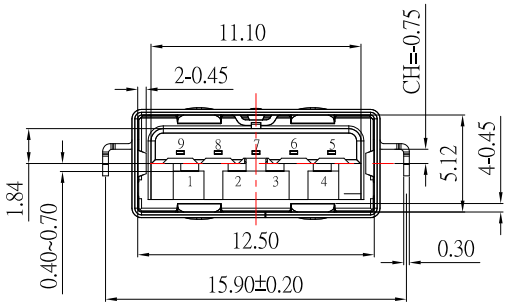

Pin NUMBER	SIGNAL NAME
1	VBUS
2	D-
3	D+
4	GND
5	StdA_SSRX-
6	StdA_SSRX+
7	GND_DRAIN
8	StdA_SSTX-
9	StdA_SSTX+
Shell	Shield

NOTE:

1.MATERIAL:

1.1 Housing: LCP

1.2 Contact: Phosphor Bronze

1.3 Shell: SUS

2.Finish:

2.1 Contact: Plated Gold in Mating Area ;
Tin Plated on Solder Balls ;
Nickel under plated overall

2.2 Shell: Nickel under Plated surface layer

3.SPECIFICATION:

3.1 Current Rate: 3.0 A

3.2 insulator Resistance:100MΩ Min

3.3 Dielectric Strength: 500V AC

3.4 Contact Resistance: 30mΩ Max

3.5 Mating Force: 8N~20N

3.6 Unmating Force: 8N~20N

3.7 Operation Temperature: -25˚C ~ +85˚C

ITEM NO.	DESCRIPTION	DRAWN	DATE

CONTACT 建倚科技股份有限公司 CONTACT TECHNOLOGY CORP.

TOLERANCE UNLESS OTHERWISE STATED : Up to 5 ±0.2; Above 5 ~ 15 ±0.3; Above 15 ~ 30 ±0.4; Above 30 ~ 50 ±0.5; Angle ±0.3˚

3RD. ANGEL'S | UNITS MM

DRAWN BY: Jack Lu	DATE 11/02/23	MAT'L	
CHECKED BY: Jacky Chen	DATE 11/02/23	FINISH	
APPROVED BY: Tony Kao	DATE 11/02/23	SCALE 1 : 1	SHEET NO. 1 of 1

TITLE	CONNECTOR		
MODLE	USB 3.1 10G AF SMT本體長=12.5mm, 板上高2.11 無捲邊		
DWG NO.	SUA-110M9-32x-S277	SIZE	A4
PART NO.	SUA-110M9-32x-S277	VER	R