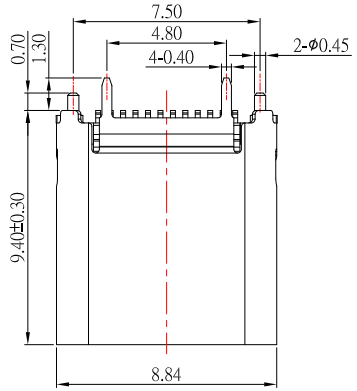

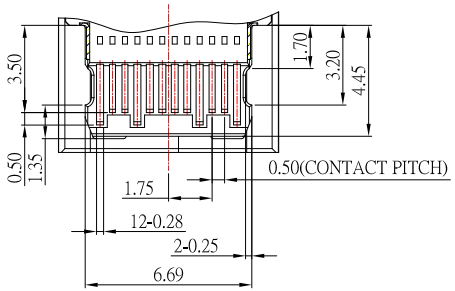

SECTION B–B

SBC-240VSE14H-31x-S382

鍍層厚度 :

Blank : 1u"
2 : 15u"
3 : 30u"

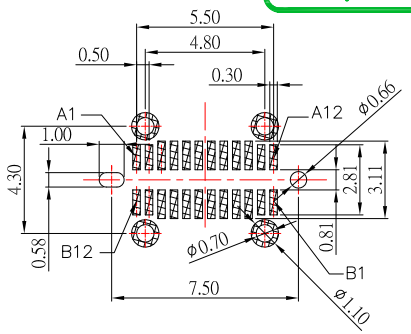

RECOMMENDED P.C.B. LAYOUT

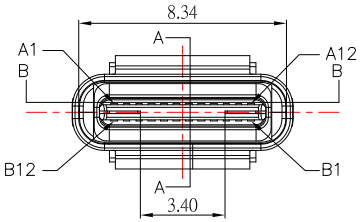

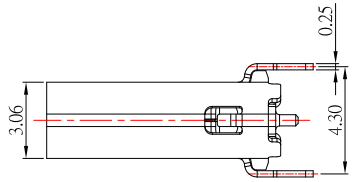

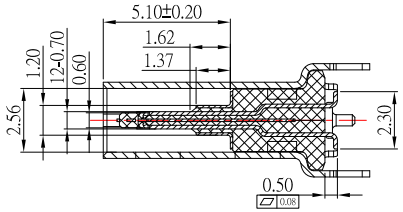

SECTION A–A

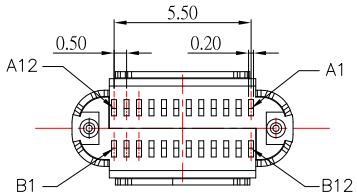

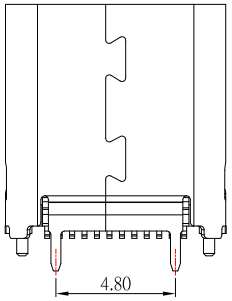

Pin	Signal Name	Mating Sequence	Pin	Signal Name	Mating Sequence
A1	GND	First	B12	GND	First
A2	SSTXp1	Second	B11	SSRXp1	Second
A3	SSTXn1	Second	B10	SSRXn1	Second
A4	V_{BUS}	First	B9	V_{BUS}	First
A5	CC1	Second	B8	SBU2	Second
A6	Dp1	Second	B7	Dn2	Second
A7	Dn1	Second	B6	Dp2	Second
A8	SBU1	Second	B5	CC2	Second
A9	V_{BUS}	First	B4	V_{BUS}	First
A10	SSRXn2	Second	B3	SSTXn2	Second
A11	SSRXp2	Second	B2	SSTXp2	Second
A12	GND	First	B1	GND	First
SHELL		GND	SHELL		GND

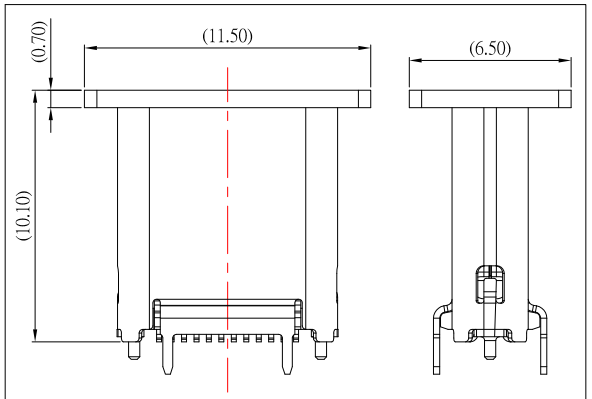

INCREASE THE DIAGRAMS OF CAP

SPECIFICATIONS

Electrical:

1.Rating: 20.0V, 5.0 A

2.Dielectric Withstand Voltage: 100V AC

3.Contact Resistance: 40 mΩ Max

4.Insulation Resistance: 100 MΩ Min

Mechanical:

1.Connector Mate and Unmate Force

1.1 Mate force: 5~20 N

1.2 Unmate force: 6~20 N

Material:

1.Housing: LCP

2.Contact: C18400

3.Shell: SUS

Finish:

1.Contact: Plated Gold in Mating Area ;
Tin Plated on Solder Balls ;
Nickel under plated overall

2.Shell: Nickel under Plated surface layer

ITEM NO.	DESCRIPTION	DRAWN	DATE

CONTACT 建倚科技股份有限公司
CONTACT TECHNOLOGY CORP.

TOLERANCE UNLESS OTHERWISE STATED : Up to 5 ±0.2; Above 5 ~ 15 ±0.3; Above 15 ~ 30 ±0.4; Above 30 ~ 50 ±0.5; Angle ±0.3°

3RD. ANGEL'S | UNITS | MM

DRAWN BY: Jack Lu	DATE 08/09/23	MAT'L	
CHECKED BY: Jacky Chen	DATE 08/09/23	FINISH	
APPROVED BY: Tony Kao	DATE 08/09/23	SCALE 1 : 1	SHEET NO. 1 of 1

TITLE	CONNECTOR		
MODLE	USB 3.1 TYPE C 直立式 SMT H9.4 mm 外殼腳長1.3 高導電銅		
DWG NO.	SBC-240VSE14H-31x-S382	SIZE	A4
PART NO.	SBC-240VSE14H-31x-S382	VER	R