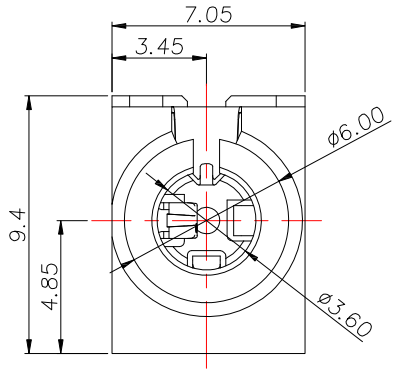

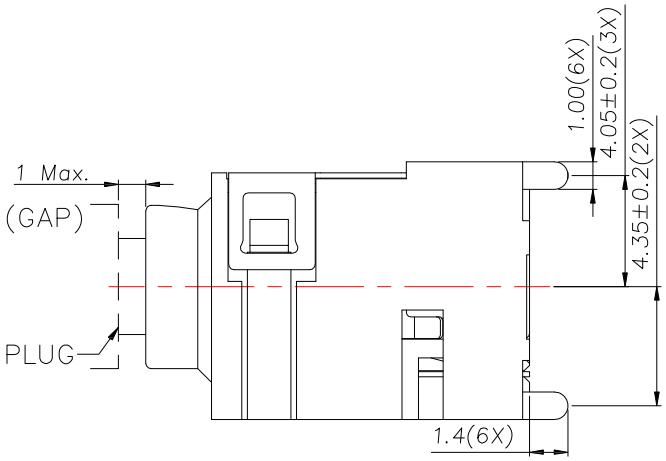

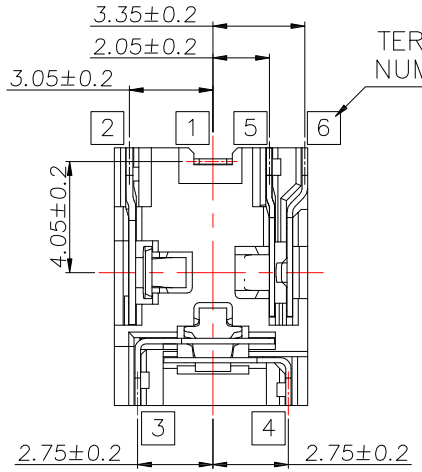

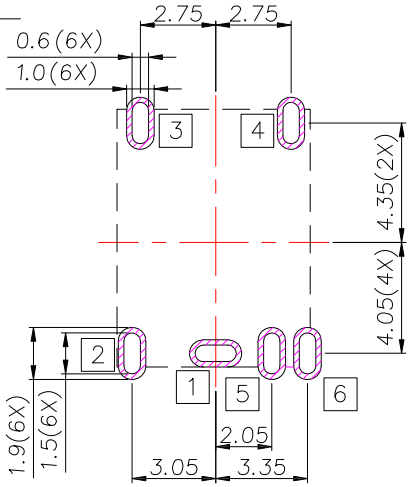

RECOMMENDED P.C.B LAYOUT
TOP VIEW

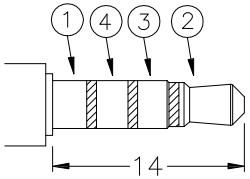

ø3.5 MATE PLUG

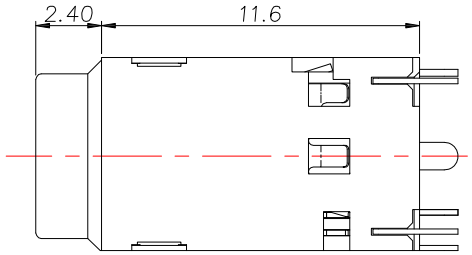

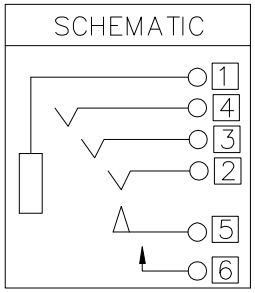

SPECIFICATION

1.Contact resistance：≤50mΩ
2.Insulation resistance：≥100MΩ
3.Withstand voltage：500VAC
4.Insertion and extraction force：3-30N
5.life test：5,000 cycles

NO.	DESCRIPTION	QTY	MATERIAL	REMARK
⑧	Insulator	1	PA10T	Black
⑦	Make terminal 6	1	Phosphor coppe,	Gold flash on contact area, gold flash plated on solder tail Area, all over nickel plated
⑥	Transfer Spring 5	1	Phosphor coppe,	
⑤	Ring spring 4	1	Phosphor coppe,	
④	Ring spring 3	1	Phosphor coppe,	
③	Tip spring 2	1	Phosphor coppe,	
②	Earth spring 1	1	Phosphor coppe,	
①	Housing	1	PA10T	Black

ITEM NO.	DESCRIPTION	DRAWN	DATE

CONTACT 建倚科技股份有限公司
CONTACT TECHNOLOGY CORP.

TOLERANCE UNLESS OTHERWISE STATED : Up to 5 ±0.2; Above 5 ~ 15 ±0.3; Above 15 ~ 30 ±0.4; Above 30 ~ 50 ±0.5; Angle ±0.3°
3RD. ANGEL'S | UNITS MM

DRAWN BY: Jack Lu	DATE 09/21/23	MAT'L	
CHECKED BY: Jacky Chen	DATE 09/21/23	FINISH	
APPROVED BY: Tony Kao	DATE 09/21/23	SCALE 1 : 1	SHEET NO. 1 of 1

TITLE	JACK
MODLE	PHONE JACK
DWG NO.	PJ-D3247F-S458
PART NO.	PJ-D3247F-S458
SIZE	A4
VER	R