SBC-WP240S3B-31x-S331

IP68

RoHS Compliant

鍍層厚度：

Blank : 1u"
2 : 15u"
3 : 30u"

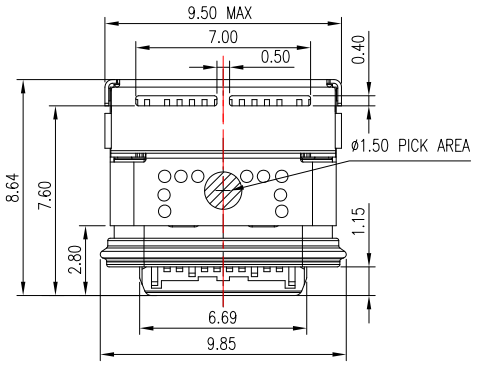

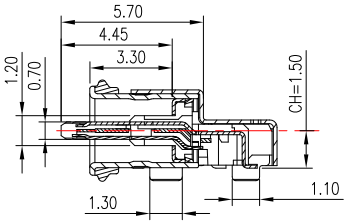

SECTION C-C(SC 1:1)

PIN ASSIGNMENTS

No.	NAME	DESCRIPTION	No.	NAME	DESCRIPTION
A1	GND	GROUND RETURN	B12	GND	GROUND RETURN
A4	VBUS	BUS POWER	B9	VBUS	BUS POWER
A5	CC1	CONFIGURATION CHANNEL	B8	SBU2	SIDEBAND USE(SBU)
A6	DP1	POSITIVE HALF OF USB2.0 DIFFERENTIAL PAIR-POSITION1	B7	DN2	NEGATIVE HALF OF USB2.0 DIFFERENTIAL PAIR-POSITION2
A7	DN1	NEGATIVE HALF OF USB2.0 DIFFERENTIAL PAIR-POSITION1	B6	DP2	POSITIVE HALF OF USB2.0 DIFFERENTIAL PAIR-POSITION2
A8	SBU1	SIDEBAND USE(SBU)	B5	CC2	CONFIGURATION CHANNEL
A9	VBUS	BUS POWER	B4	VBUS	BUS POWER
A12	GND	GROUND RETURN	B1	GND	GROUND RETURN

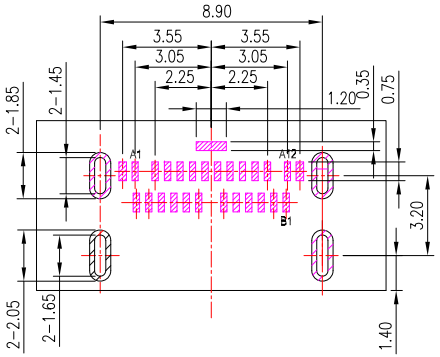

PCB LAYOUT

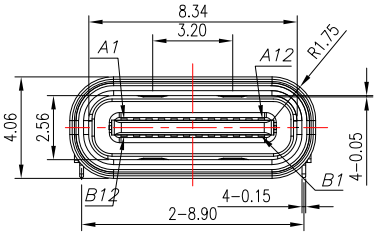

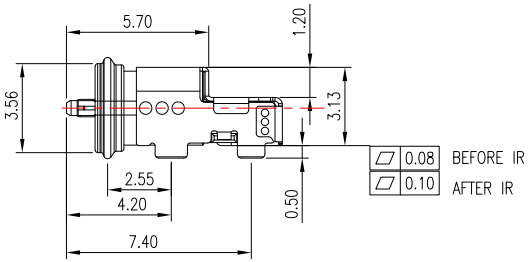

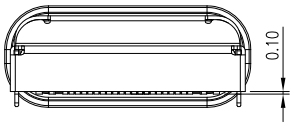

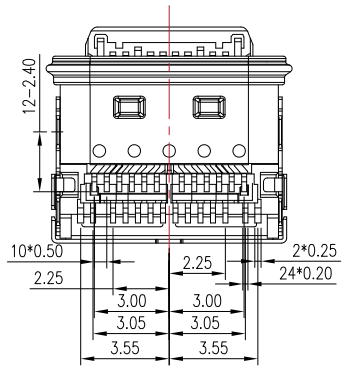

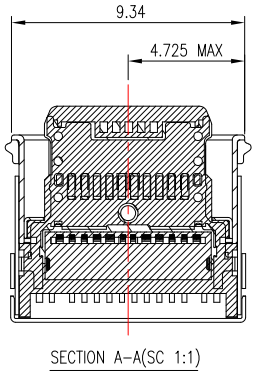

SECTION A-A(SC 1:1)

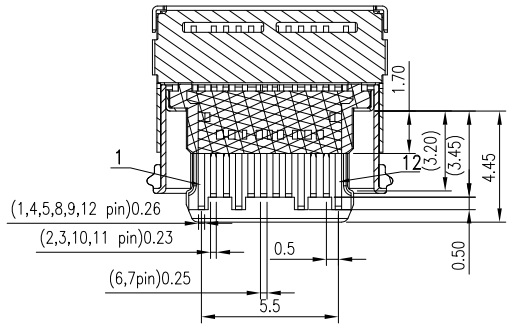

SECTION B-B(SC 1:1)

SPECIFICATIONS

Electrical:

1. Rating: 5.0A
2. Contact Resistance: 40 mΩ Max
3. Insulation Resistance: 1000 MΩ Min
4. Dielectric Withstanding Voltage: 100V AC

Mechanical:

1. Connector Mate and Unmate Force
   - 1.1 Mate force: 5~20 N
   - 1.2 Unmate force: 8~20 N

Material:

1. Housing: PA46
2. Contact: C18140
3. Shell: SUS

Finish:

1. Contact: Plated Gold in Mating Area ;
   Gold Plated on Solder Balls ;
   Nickel under plated overall
2. Shell: Nickel under Plated surface layer

ITEM NO.	DESCRIPTION	DRAWN	DATE

CONTACT 建倚科技股份有限公司
CONTACT TECHNOLOGY CORP.

TOLERANCE UNLESS OTHERWISE STATED : Up to 5 ±0.2; Above 5 ~ 15 ±0.3; Above 15 ~ 30 ±0.4; Above 30 ~ 50 ±0.5; Angle ±0.3°

3RD. ANGEL'S | UNITS MM

DRAWN BY: Jack Lu	DATE 06/05/23	MAT'L	
CHECKED BY: Jacky Chen	DATE 06/05/23	FINISH	
APPROVED BY: Tony Kao	DATE 06/05/23	SCALE 1 : 1	SHEET NO. 1 of 2

TITLE	CONNECTOR		
MODLE	USB 3.1 TYPE C 防水型 板上式 H3.13 IP68		
DWG NO.	SBC-WP240S3B-31x-S331	SIZE	A4
PART NO.	SBC-WP240S3B-31x-S331	VER	R