CMB-UCUAx-V-S412

HOUSING COLOR :

White : W
Black : B

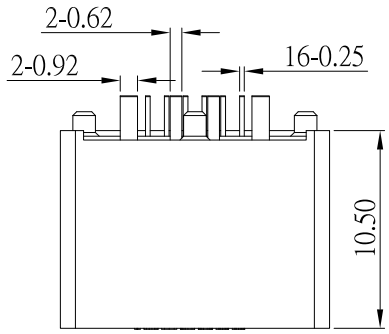

Type c pin Def:

		A1	GND	B12	GND
		A4	VBUS	B9	VBUS
		A5	CC1	B8	SBU2
USB 2.0 pin Def:		A6	D+	B7	D-
1	VBUS	A7	D-	B6	D+
2	D-	A8	SBU1	B5	CC2
3	D+	A9	VBUS	B4	VBUS
4	GND	A12	GND	B1	GND
PIN	SIGNAL NAME	PIN	SIGNAL NAME	PIN	SIGNAL NAME

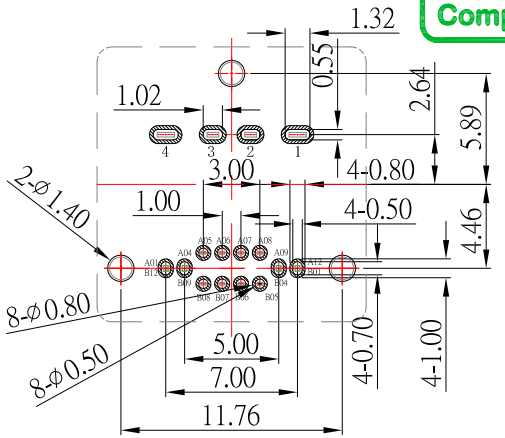

RECOMMENDED P.C.B. LAYOUT

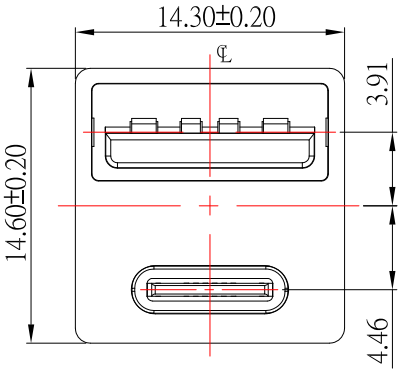

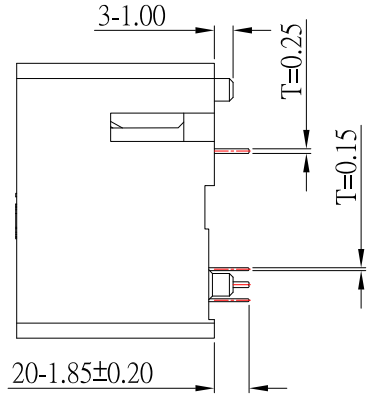

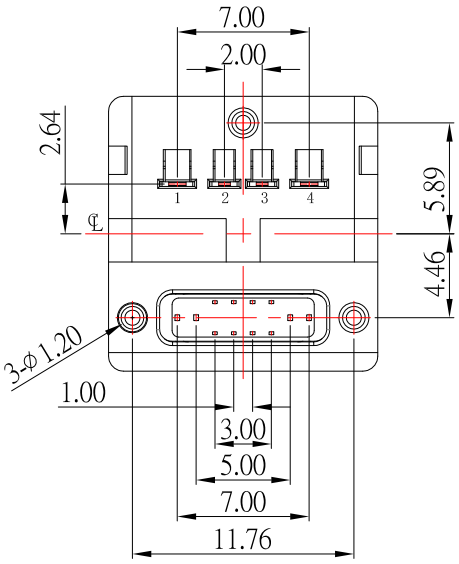

SPECIFICATIONS

Electrical:

1.Rating: 3.0A

2.Dielectric Withstand Voltage: 150V AC

3.Contact Resistance: 30 mΩ Max

4.Insulation Resistance: 100 MΩ Min

Mechanical:

1.Connector Mate and Unmate Force

1.1 Mate force: 5~20 N

1.2 Unmate force: 8~20 N

Material:

1.Housing: LCP

2.Contact: C7025

3.Shell: Brass

Finish:

1.Contact: Plated Gold in Mating Area ;
Tin Plated on Solder Balls ;
Nickel under plated overall

2.Shell: Nickel under Plated surface layer

ITEM NO.	DESCRIPTION	DRAWN	DATE

CONTACT 建倚科技股份有限公司
CONTACT TECHNOLOGY CORP.

TOLERANCE UNLESS OTHERWISE STATED : Up to 5 ±0.2; Above 5 ~ 15 ±0.3; Above 15 ~ 30 ±0.4; Above 30 ~ 50 ±0.5; Angle ±0.3°

3RD. ANGEL'S | UNITS MM

DRAWN BY: Jack Lu	DATE 06/29/23	MAT'L		TITLE	Combo Connector		
CHECKED BY: Jacky Chen	DATE 06/29/23	FINISH		MODLE	USB TYPE C 16P+ USB 2.0 二合一母座 H10.5		
APPROVED BY: Tony Kao	DATE 06/29/23	SCALE	1 : 1	DWG NO.	CMB-UCUAx-V-S412	SIZE	A4
		SHEET NO.	1 of 1	PART NO.	CMB-UCUAx-V-S412	VER	R