SBC-160M27-20x-S165

鍍層厚度 :

Blank : 1u"
2 : 15u"
3 : 30u"

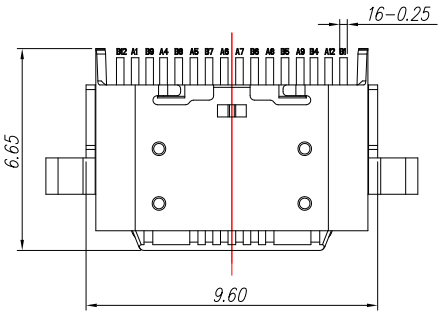

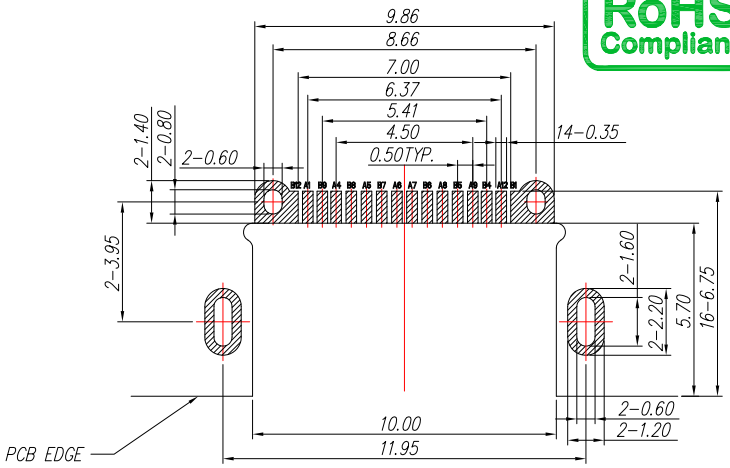

RECOMMENDED P.C.B. LAYOUT

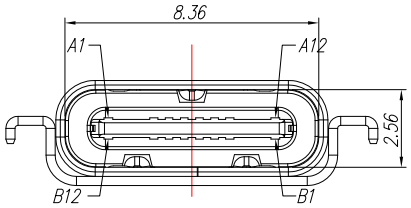

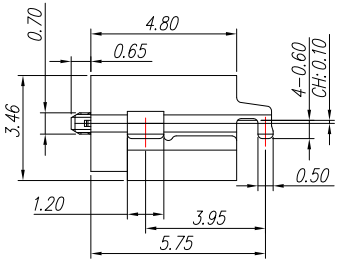

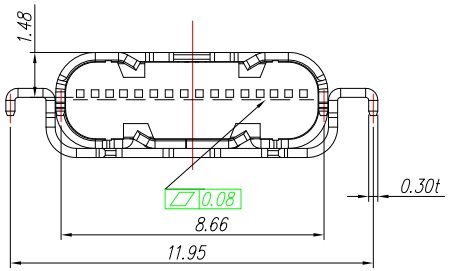

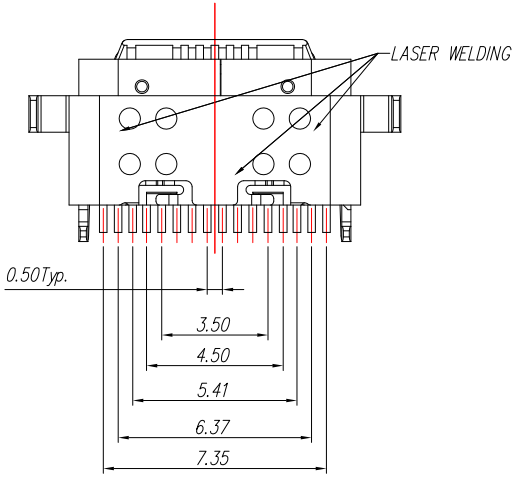

PIN ASSIGNMENT												
A1	A2	A3	A4	A5	A6	A7	A8	A9	A10	A11	A12	BLADE	SHELL
GND	TX1+	TX1-	VBUS	CC1	D+	D-	SBU1	VBUS	RX2-	RX2+	GND	GND	GND
GND	RX1+	RX1-	VBUS	SBU2	D-	D+	CC2	VBUS	TX2-	TX2+	GND		
B12	B11	B10	B9	B8	B7	B6	B5	B4	B3	B2	B1		

SPECIFICATIONS

Electrical:

1.Rating: 20V, 5.0 A

2.Dielectric Withstand Voltage: 100V AC

3.Contact Resistance: 30 mΩ Max

4.Insulation Resistance: 100 MΩ Min

Mechanical:

1.Connector Mate and Unmate Force

1.1 Mate force: 5~20 N

1.2 Unmate force: 8~20 N

Material:

1.Housing: PA46

2.Contact: C7025

3.Shell: SUS

Finish:

1.Contact: Plated Gold in Mating Area ;
Gold Plated on Solder Balls ;
Nickel under plated overall

2.Shell: Nickel under Plated surface layer

ITEM NO.	DESCRIPTION	DRAWN	DATE

CONTACT 建倚科技股份有限公司
CONTACT TECHNOLOGY CORP.

TOLERANCE UNLESS OTHERWISE STATED : Up to 5 ±0.2; Above 5 ~ 15 ±0.3; Above 15 ~ 30 ±0.4; Above 30 ~ 50 ±0.5; Angle ±0.3°

3RD. ANGEL'S | UNITS MM

DRAWN BY: Jack Lu	DATE 07/05/23	MAT'L		TITLE	CONNECTOR
CHECKED BY: Jacky Chen	DATE 07/05/23	FINISH		MODLE	USB TYPE C 2.0 沉板板上H1.48mm CH0.10mm
APPROVED BY: Tony Kao	DATE 07/05/23	SCALE	1 : 1	DWG NO.	SBC-160M27-20x-S165 SIZE A4
		SHEET NO.	1 of 1	PART NO.	SBC-160M27-20x-S165 VER R