HD2-19P-SND1xx-S297

外殼電鍍材質：

Blank : Nickel
G : Gold

端子接觸區厚度：

Blank : 1u"
2 : 15u"
3 : 30u"

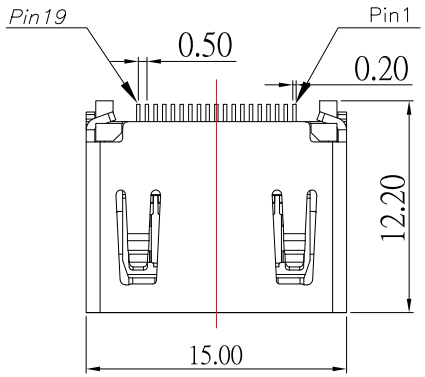

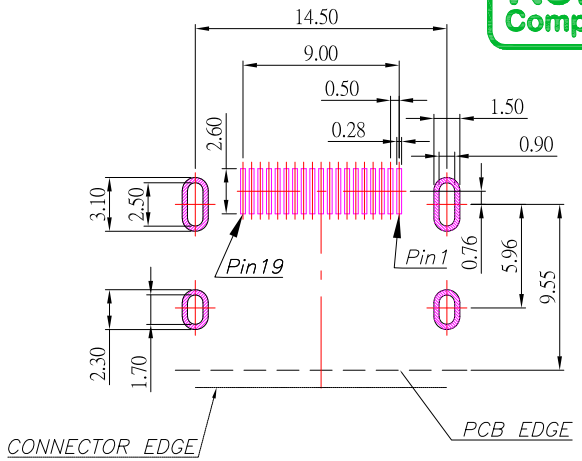

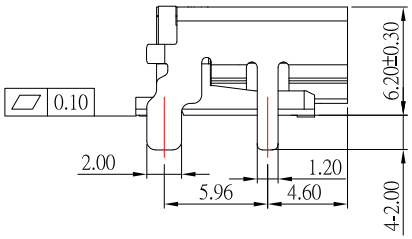

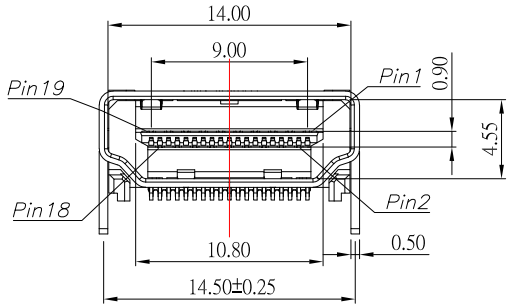

RECOMMENDED P.C.B. LAYOUT
TOP VIEW

HDMI PIN ASSIGNMENT			
PIN	SIGNAL TYPE	11	TMDS Clock Shield
1	TMDS Data2+	12	TMDS Clock−
2	TMDS Data2 Shield	13	CEC
3	TMDS Data2−	14	Utility
4	TMDS Data1+	15	SCL
5	TMDS Data1 Shield	16	SDA
6	TMDS Data1−	17	DDC/CEC Ground
7	TMDS Data0+	18	+5V Power
8	TMDS Data0 Shield	19	Hot Plug Detect
9	TMDS Data0−		
10	TMDS Clock+		

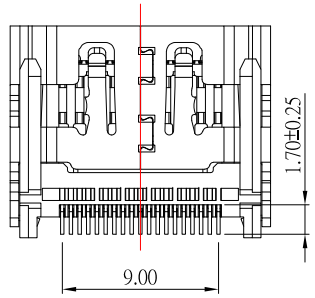

NOTE:

1.MATERIAL:
- 1.1 HOUSING: LCP, BLACK
- 1.2 CONTACT: BRASS
- 1.3 SHELL: BRASS

2.PLATING :
- 2.1 CONTACT: PLATED GOLD IN MATING AREA ;
  TIN PLATED ON SOLDER BALLS ;
  NICKEL UNDER PLATED OVERALL
- 2.2 SHELL: NICKELOR GOLD UNDER PLATED SURFACE LAYER

3.MECHANICAL:
- 3.1 INSERTION FORCE: 4.5 Kgf MAX
- 3.2 WITHDRAWAL FORCE: 1.0 ~ 4.0 Kgf
- 3.3 LIFE: 10000 Cycles

4.ELECTRICAL:
- 4.1RATING: 40V,0.5A
- 4.2 CONTACT RESISTANCE: 30 mΩ Max
- 4.3 INSULATION RESISTANCE: 100MΩ Min
- 4.4 DIELECTRIC WITHSTANDING VOLTAGE: 500V AC / minute
- 4.5 OPERATING TEMPERATURE: -25°C~ 85°C

ITEM NO.	DESCRIPTION	DRAWN	DATE
3	新增PCB LAYOUT尺寸	Jack	092126
2	新增PIN定義	Jack	051123
1	新增鍍層選項	Jack	070921

CONTACT 建倚科技股份有限公司
CONTACT TECHNOLOGY CORP.

TOLERANCE UNLESS OTHERWISE STATED :
Up to 5 ±0.2
Above 5 ~ 15 ±0.3
Above 15 ~ 30 ±0.4
Above 30 ~ 50 ±0.5
Angle ±0.3°

3RD. ANGEL'S | UNITS MM

DRAWN BY: Jack Lu	DATE 09/21/26	MAT'L	
CHECKED BY: Jacky Chen	DATE 09/21/26	FINISH	
APPROVED BY: Tony Kao	DATE 09/21/26	SCALE 1 : 1	SHEET NO. 1 of 1

TITLE	CONNECTOR		
MODLE	HDMI2.1 無耳無柱 四直腳腳長2.0		
DWG NO.	HD2-19P-SND1xx-S297	SIZE	A4
PART NO.	HD2-19P-SND1xx-S297	VER	R3