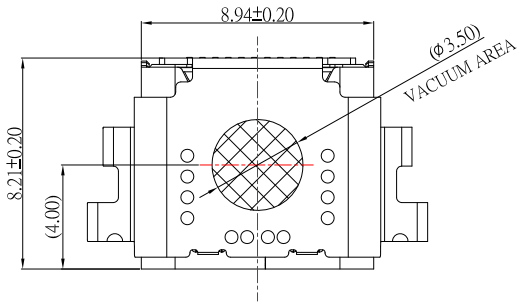

SBC-240M17H-31x-S277

鍍層厚度 :

Blank : 1u"
2 : 15u"
3 : 30u"

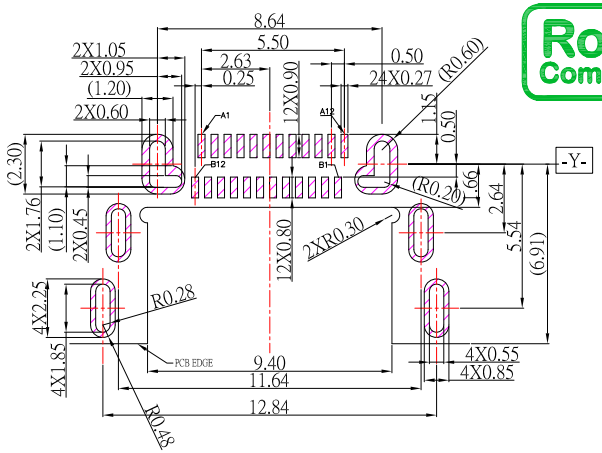

RECOMMENDED P.C.B. LAYOUT

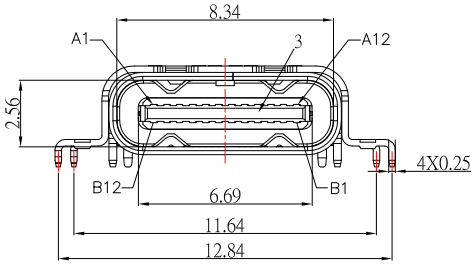

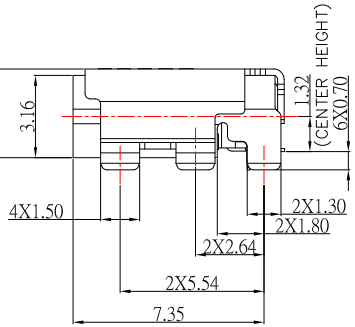

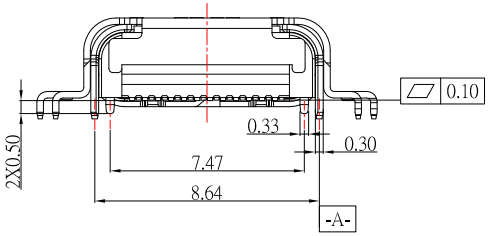

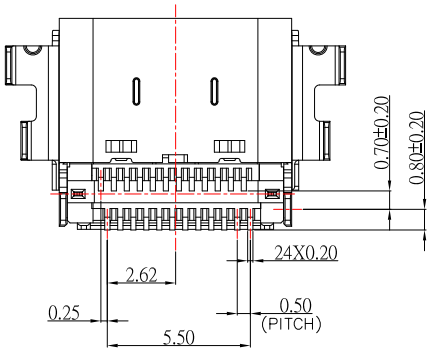

PIN ASSIGNMENT

A1	A2	A3	A4	A5	A6	A7	A8	A9	A10	A11	A12
GND	TX1+	TX1−	Vbus	CC1	D+	D−	SBU1	Vbus	RX2−	RX2+	GND
GND	RX1+	RX1−	Vbus	SBU2	D−	D+	CC2	Vbus	TX2−	TX2+	GND
B12	B11	B10	B9	B8	B7	B6	B5	B4	B3	B2	B1

SPECIFICATIONS

Electrical:

1.Rating: 5.0 A

2.Dielectric Withstand Voltage: 100V AC

3.Contact Resistance: 40 mΩ Max

4.Insulation Resistance: 100 MΩ Min

Mechanical:

1.Connector Mate and Unmate Force

1.1 Mate force: 5~20 N

1.2 Unmate force: 8~20 N

Material:

1.Housing: LCP

2.Contact: Copper Alloy

3.Shell: SUS

Finish:

1.Contact: Plated Gold in Mating Area ;

Tin Plated on Solder Balls ;

Nickel under plated overall

2.Shell: Nickel under Plated surface layer

ITEM NO.	DESCRIPTION	DRAWN	DATE
1	更新料號	Jack	071621

建倚科技股份有限公司
CONTACT TECHNOLOGY CORP.

TOLERANCE UNLESS OTHERWISE STATED : Up to 5 ±0.2; Above 5 ~ 15 ±0.3; Above 15 ~ 30 ±0.4; Above 30 ~ 50 ±0.5; Angle ±0.3°

3RD. ANGEL'S | UNITS | MM

DRAWN BY: Jack Lu	DATE 07/16/21	MAT'L	
CHECKED BY: Jacky Chen	DATE 07/16/21	FINISH	
APPROVED BY: Tony Kao	DATE 07/16/21	SCALE 1 : 1	SHEET NO. 1 of 1

TITLE	CONNECTOR		
MODLE	TYPE CF 雙排 SMT 沉板 板上H3.18 高導電銅		
DWG NO.	SBC-240M17H-31x-S277	SIZE	A4
PART NO.	SBC-240M17H-31x-S277	VER	R1