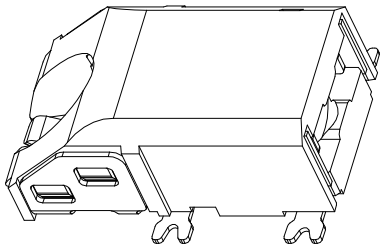

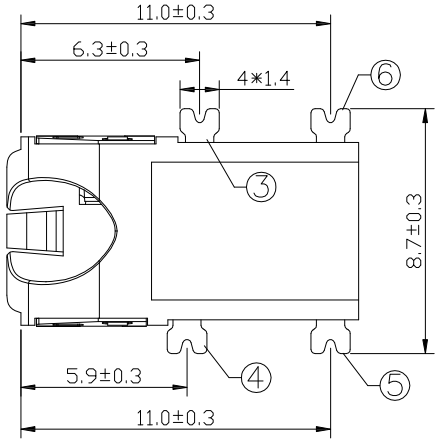

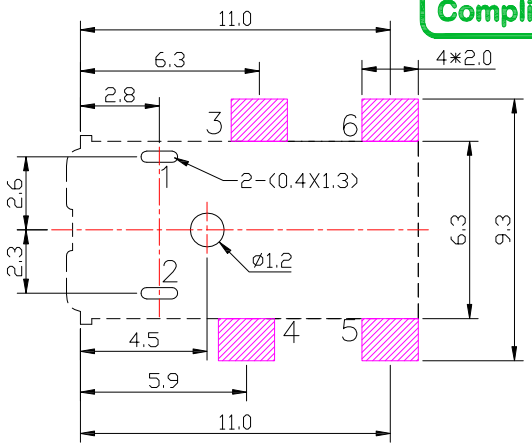

P.C.B LAYOUT
TOP VIEW

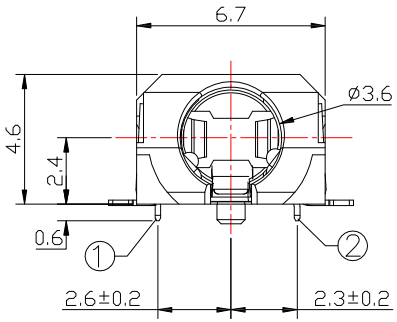

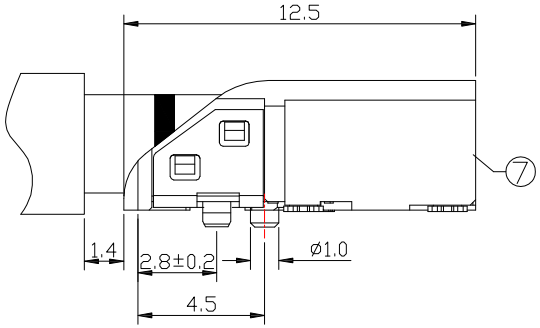

SCHEMATIC

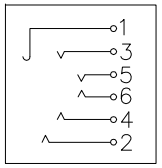

SPECIFICATION

1.Rating ：DC 30V , 1.0A；
2.Contact resistance：≤ 30mΩ；
3.Insulation resistance：≥100MΩ；
4.Withstand voltage：500VAC ；
5.Insertion and extraction force：3-30N;
6.life test：5,000 cycles。

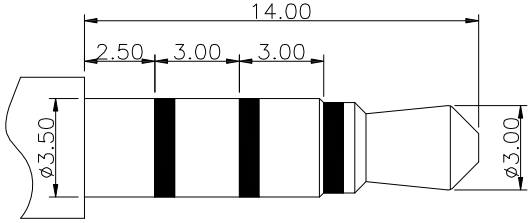

ø3.50mm 4 POLE PLUG

NO.	DESCRIPTION	QTY	MATERIAL	PLATING
7	HOUSING	1	LCP	
6	6# CONTACT FOOT	1	PHOSPHOR BRONZE	Au-Plating
5	5# CONTACT FOOT	1	PHOSPHOR BRONZE	Au-Plating
4	4# CONTACT FOOT	1	PHOSPHOR BRONZE	Au-Plating
3	3# CONTACT FOOT	1	PHOSPHOR BRONZE	Au-Plating
2	2# CONTACT FOOT	1	PHOSPHOR BRONZE	Au-Plating
1	1# CONTACT FOOT	1	PHOSPHOR BRONZE	Au-Plating

ITEM NO.	DESCRIPTION	DRAWN	DATE

建倚科技股份有限公司
CONTACT TECHNOLOGY CORP.

TOLERANCE UNLESS OTHERWISE STATED : Up to 5 ±0.2; Above 5 ~ 15 ±0.3; Above 15 ~ 30 ±0.4; Above 30 ~ 50 ±0.5; Angle ±0.3°

3RD. ANGEL'S | UNITS MM

DRAWN BY: Jack Lu	DATE 01/15/19	MAT'L		TITLE	JACK		
CHECKED BY: Jacky Chen	DATE 01/15/19	FINISH		MODLE	PHONE JACK		
APPROVED BY: Tony Kao	DATE 01/15/19	SCALE	1 : 1	DWG NO.	PJ-S3214-S124	SIZE	A4
		SHEET NO.	1 of 1	PART NO.	PJ-S3214-S124	VER	R