# SBC-240P-31x-S175

鍍層厚度 :

| |
|---|
| Blank : 1u" |
| 2 : 15u" |
| 3 : 30u" |

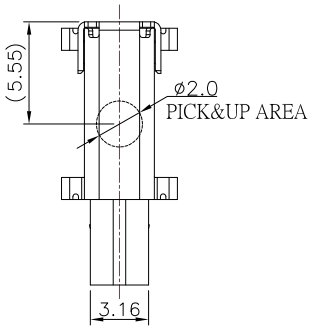


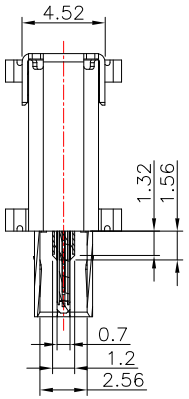


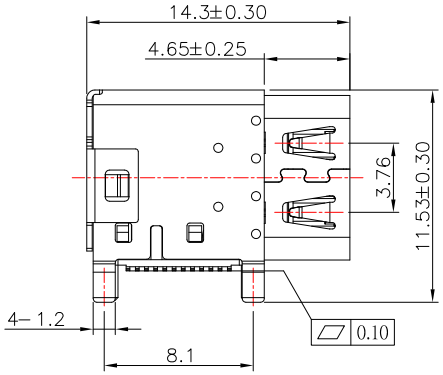


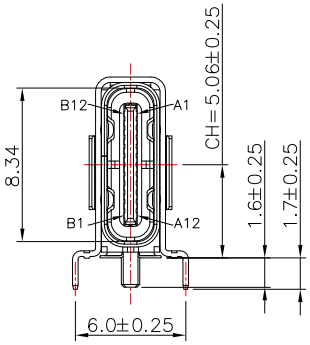


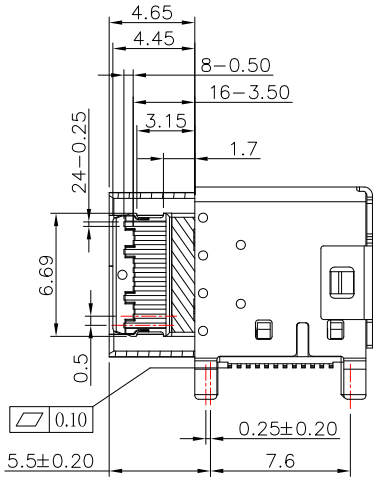


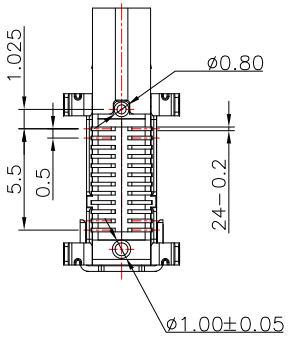


PIN ASSIGNMENT:

| PIN | Signal Name | PIN | Signal Name |
|---|---|---|---|
| A1 | GND | B12 | GND |
| A2 | SSTXp1 | B11 | SSRXp1 |
| A3 | SSTXn1 | B10 | SSRXn1 |
| A4 | Vbus | B9 | Vbus |
| A5 | CC1 | B8 | SBU2 |
| A6 | Dp1 | B7 | DN2 |
| A7 | Dn1 | B6 | DP2 |
| A8 | SBU1 | B5 | CC2 |
| A9 | Vbus | B4 | Vbus |
| A10 | SSRXn2 | B3 | SSTXn2 |
| A11 | SSRXp2 | B2 | SSTXp2 |
| A12 | GND | B1 | GND |

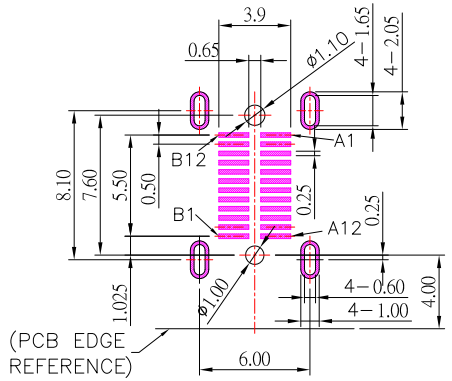


P.C.B LAYOUT MOUNTING PATTERN

## SPECIFICATIONS

**Electrical:**

1.Rating: 5.0A

2.Contact Resistance: 40 mΩ Max

3.Insulation Resistance: 100 MΩ Min

4.Withstanding Voltage: 100V AC

**Material:**

1.Housing: LCP

2.Contact: C18400

3.Shell: SUS

**Finish:**

1.Contact: Plated Gold in Mating Area ;
Gold Plated on Solder Balls ;
Nickel under plated overall

2.Shell: Nickel under Plated surface layer

| ITEM NO. | DESCRIPTION | DRAWN | DATE |
|---|---|---|---|
| 1 | 新增尺寸 | Jack | 100423 |

CONTACT 建倚科技股份有限公司
CONTACT TECHNOLOGY CORP.

TOLERANCE UNLESS OTHERWISE STATED : Up to 5 ±0.2; Above 5 ~ 15 ±0.3; Above 15 ~ 30 ±0.4; Above 30 ~ 50 ±0.5; Angle ±0.3°

3RD. ANGEL'S | UNITS MM

| | | | |
|---|---|---|---|
| DRAWN BY: Jack Lu | DATE 10/04/23 | MAT'L | |
| CHECKED BY: Jacky Chen | DATE 10/04/23 | FINISH | |
| APPROVED BY: Tony Kao | DATE 10/04/23 | SCALE 1 : 1 | SHEET NO. 1 of 1 |

| | | | |
|---|---|---|---|
| TITLE | CONNECTOR | | |
| MODLE | USB 3.1 TYPE C 側立式貼片 SMT | | |
| DWG NO. | SBC-240P-31x-S175 | SIZE | A4 |
| PART NO. | SBC-240P-31x-S175 | VER | R1 |