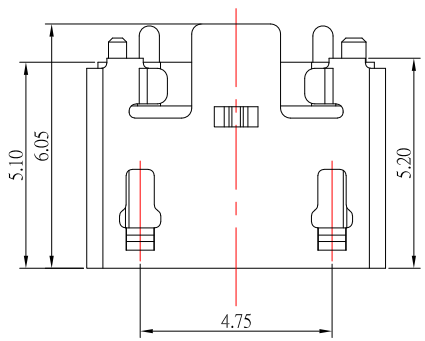

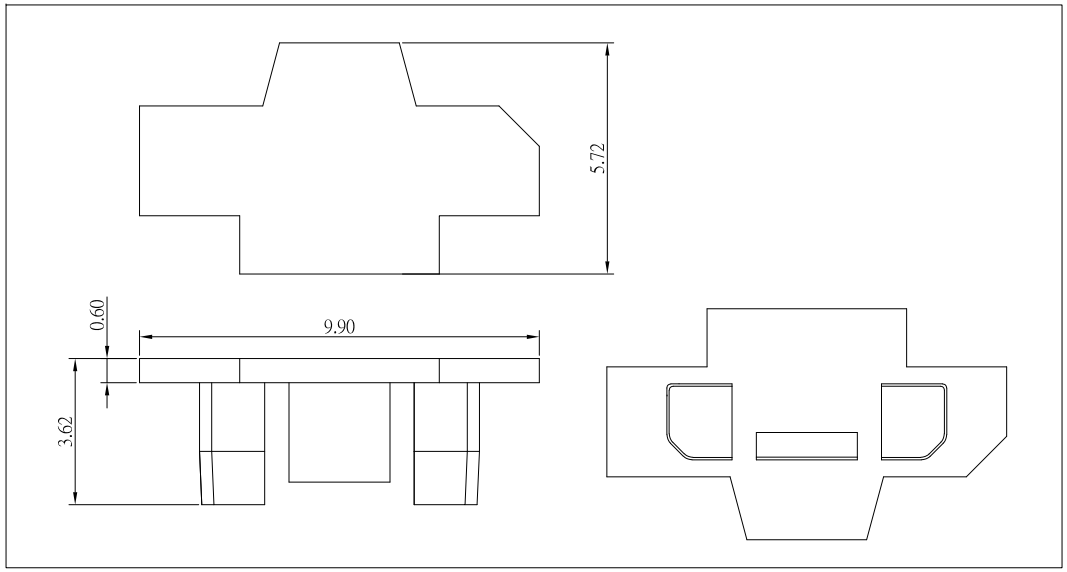

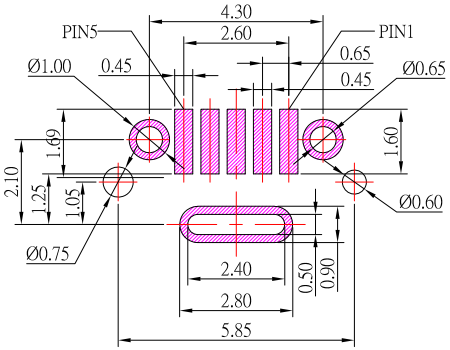

P.C.B LAYOUT MOUNTING PATTERN

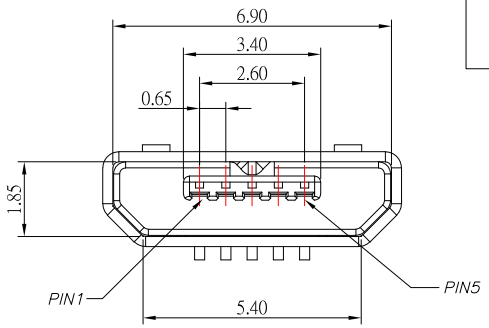

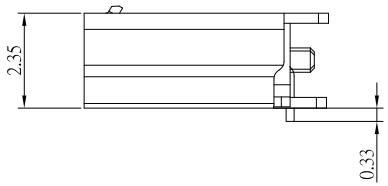

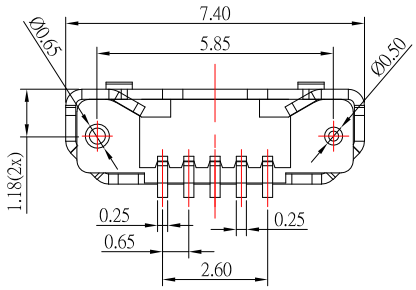

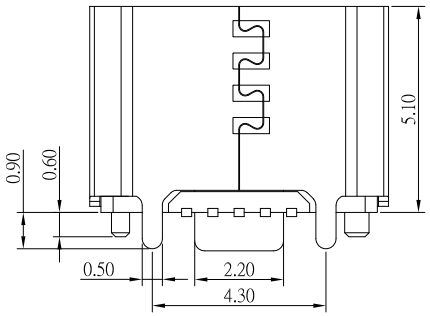

NOTES:

1.MATERIAL:

1.1 HOUSING: LCP,Black

1.2 CONTACT: BRASS

1.3 SHELL: SUS

2.Finish:

2.1 CONTACT: PLATED GOLD IN MATING AREA ;
GOLD PLATED ON SOLDER BALLS ;
NICKEL UNDER PLATED OVERALL

2.2 SHELL: NICKEL UNDER PLATED SURFACE LAYER

3.SPECIFICATION:

3.1 RATING: 30V, 1.0 A

3.2 DIELECTRIC WITHSSTANDING VOLTAGE: 100 VAC / MINUTE

3.3 CONTACT RESISTANCE: 30 mΩ MAX.

3.4 INSULATION RESISTANCE: 100 MΩ MIN.

3.5 LIFE: 10,000 CYCLES

ITEM NO.	DESCRIPTION	DRAWN	DATE
3	更新圖面	Jack	112625
2	新增HOUSING顏色	Jack	011425
1	新增PCB LAYOUT中PIN編號	Jack	021722

CONTACT 建倚科技股份有限公司
CONTACT TECHNOLOGY CORP.

TOLERANCE UNLESS OTHERWISE STATED : Up to 5 ± 0.2; Above 5 ~ 15 ± 0.3; Above 15 ~ 30 ± 0.4; Above 30 ~ 50 ± 0.5; Angle ± 0.3°

3RD. ANGEL'S | UNITS MM

		DATE
DRAWN BY:	Jack Lu	11/26/25
CHECKED BY:	Jacky Chen	11/26/25
APPROVED BY:	Tony Kao	11/26/25

MAT'L		TITLE	CONNECTOR
FINISH		MODLE	MICRO USB 直立式 SMT TYPE 無捲邊有柱
SCALE	1 : 1	DWG NO.	MRUSB-5B-VSE1A-S165
SHEET NO.	1 of 1	PART NO.	MRUSB-5B-VSE1A-S165

SIZE A4 | VER R3