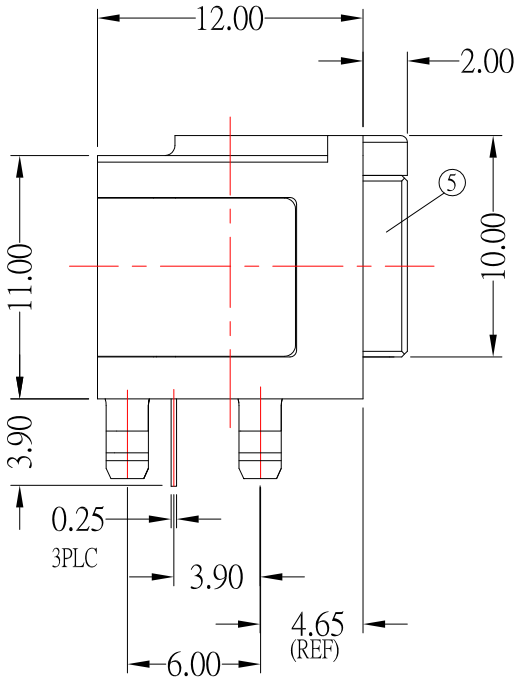

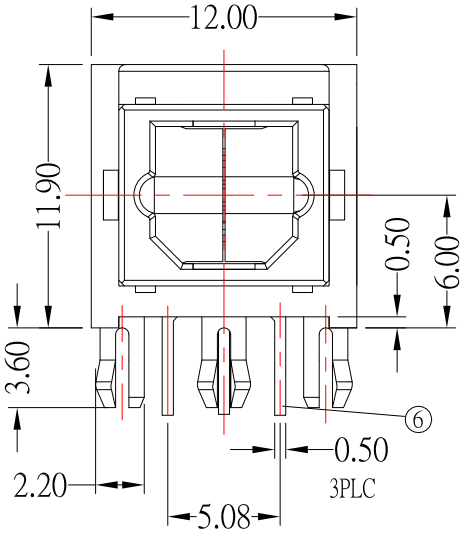

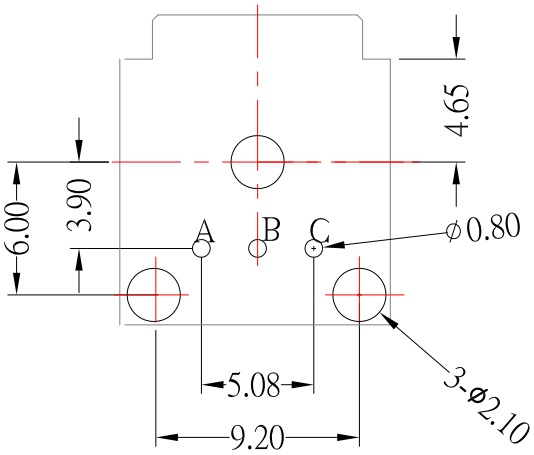

PCB LAYOUT
TOP VIEW

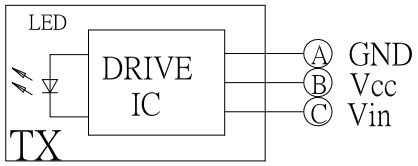

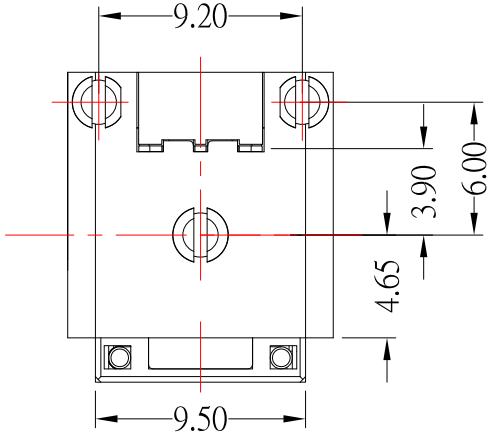

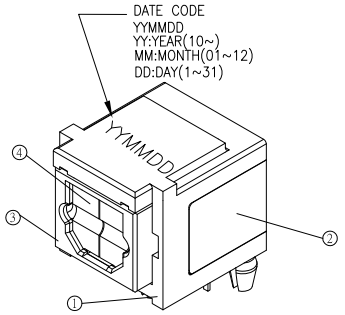

SPECIFICATIONS:

1.DISSIPATION CURRENT: 5.0 mA.
2.PPERATING VOLTAGE(Vcc): 2.7-5.5 V.
3.INSERTION FORCE:4.0Max Kgs
4.EXTRACTION FORCE:0.6Kgs TO 4.0 Kgs
5.ENDURANCE:500 CYCLEs
6.OPERATING TEMPERATURE: -25 TO +70 ℃.

ITEM	DESCRTPTION	MATERIAL	PLATING&COLOR	Q'TY
6	TX UNIT	25M		1
5	COIL SPRING	SUS		2
4	GATE	PA9T	GREEN COLOR	2
3	FRAME	PA9T	BLACK COLOR	1
2	COVER	PA9T	BLACK COLOR	1
1	HOUSING	PA9T	BLACK COLOR	1

ITEM NO.	DESCRIPTION	DRAWN	DATE
1	新增傳輸代碼	Jack	112219

CONTACT 建倚科技股份有限公司
CONTACT TECHNOLOGY CORP.

TOLERANCE UNLESS OTHERWISE STATED : Up to 5 ±0.2; Above 5 ~ 15 ±0.3; Above 15 ~ 30 ±0.4; Above 30 ~ 50 ±0.5; Angle ±0.3°

3RD. ANGEL'S | UNITS MM

DRAWN BY: Jack Lu	DATE 11/22/19	MAT'L		TITLE	JACK
CHECKED BY: Jacky Chen	DATE 11/22/19	FINISH		MODLE	OPTICAL JACK(發射端)
APPROVED BY: Tony Kao	DATE 11/22/19	SCALE	1 : 1	DWG NO.	OJ-418-TX2-S214
		SHEET NO.	1 of 1	PART NO.	OJ-418-TX2-S214

SIZE A4 | VER R1