SBC-240VS6-31x-S277

鍍層厚度 :

Blank : 1u"
2 : 15u"
3 : 30u"

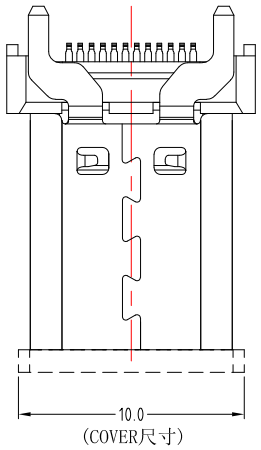

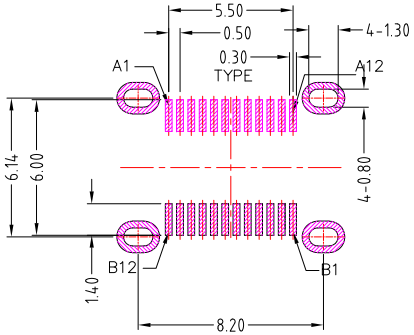

RECOMMEND P.C.B LAYOUT

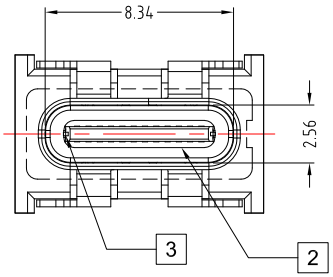

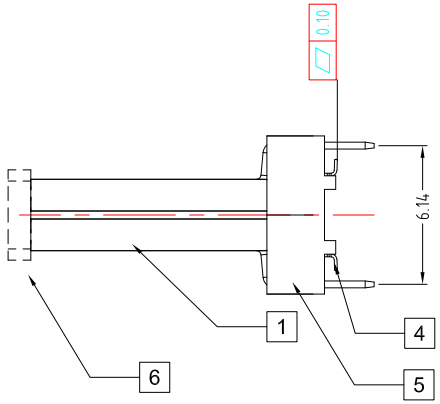

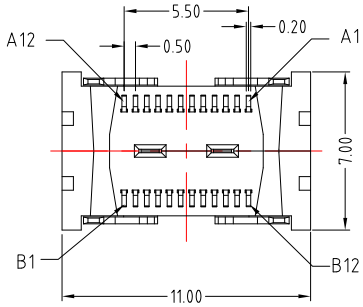

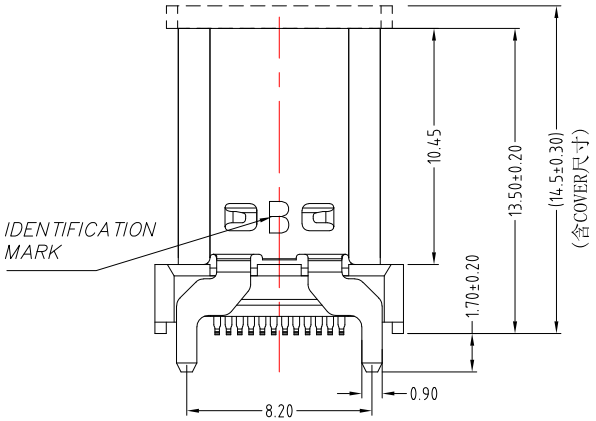

USB TYPE-C PIN ASSIGNMENTS

PIN NUMBER	SIGNAL NAME	PIN NUMBER	SIGNAL NAME
A1	GND	B12	GND
A2	SSTXp1	B11	SSRXp1
A3	SSTXn1	B10	SSRXn1
A4	VBUS	B9	VBUS
A5	CC1	B8	SBU2
A6	Dp1	B7	Dn2
A7	Dn1	B6	Dp2
A8	SBU1	B5	CC2
A9	VBUS	B4	VBUS
A10	SSRXn2	B3	SSTXn2
A11	SSRXp2	B2	SSTXp2
A12	GND	B1	GND

SPECIFICATIONS

Electrical:

1.Dielectric Withstand Voltage: 100V AC

2.Contact Resistance: 40 mΩ Max

3.Insulation Resistance: 100 MΩ Min

Mechanical:

1.Connector Mate and Unmate Force

1.1 Mate force: 5~20 N

1.2 Unmate force: 8~20 N

Material:

1.Housing: LCP

2.Contact: C7025

3.Shell: SUS

Finish:

1.Contact: Plated Gold in Mating Area ;
Tin Plated on Solder Balls ;
Nickel under plated overall

2.Shell: Nickel under Plated surface layer

ITEM NO.	DESCRIPTION	DRAWN	DATE
2	更新料號	Jack	070126
1	更新樣式	Jack	032122

CONTACT 建倚科技股份有限公司
CONTACT TECHNOLOGY CORP.

TOLERANCE UNLESS OTHERWISE STATED :
Up to 5 ±0.2
Above 5 ~ 15 ±0.3
Above 15 ~ 30 ±0.4
Above 30 ~ 50 ±0.5
Angle ±0.3°

3RD. ANGEL'S | UNITS MM

DRAWN BY: Jack Lu	DATE 07/01/26	MAT'L	
CHECKED BY: Jacky Chen	DATE 07/01/26	FINISH	
APPROVED BY: Tony Kao	DATE 07/01/26	SCALE 1 : 1	SHEET NO. 1 of 1

TITLE	CONNECTOR		
MODLE	TYPE C FEMALE VERTICAL H:13.5mm SMT TYPE		
DWG NO.	SBC-240VS6-31x-S277	SIZE	A4
PART NO.	SBC-240VS6-31x-S277	VER	R2