SBC-160VSEx-20xx-S412

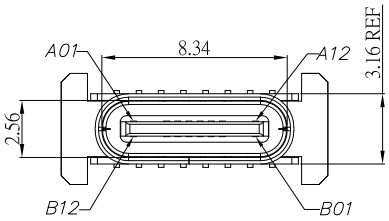

	A	B	C	D	F	J	K
L1	9.30	10.00	10.50	12.40	13.10	13.70	15.00
L2	0.46	0.24	0.74	0.00	0.70	1.30	0.55

Housing Color :

BLANK	Black
B	Blue

鍍層厚度 :

Blank : 1u"
2 : 15u"
3 : 30u"

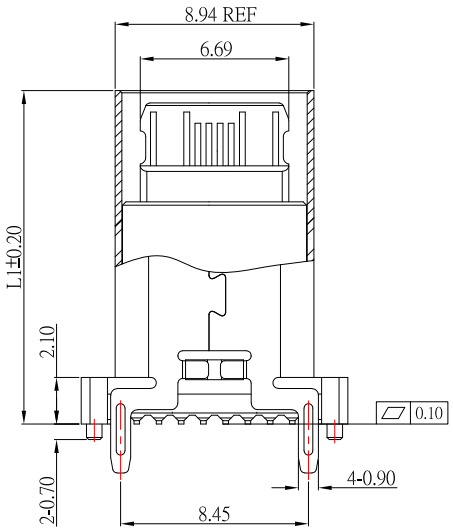

剖視圖

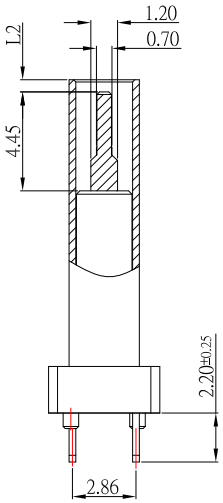

剖視圖

A1	GND	B12	GND
A4	VBUS	B9	VBUS
A5	CC1	B8	SBU2
A6	D+	B7	D−
A7	D−	B6	D+
A8	SBU1	B5	CC2
A9	VBUS	B4	VBUS
A12	GND	B1	GND
PIN	SIGNAL NAME	PIN	SIGNAL NAME

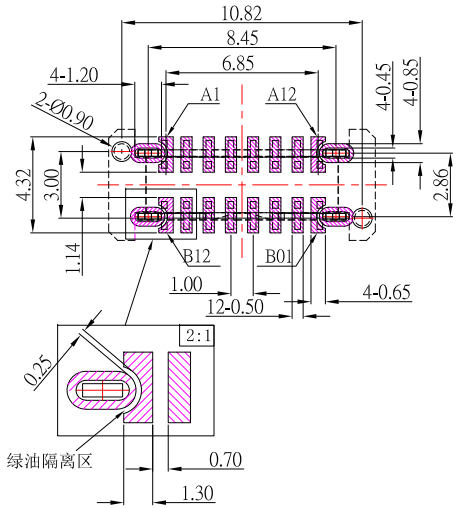

P.C.B. LAYOUT

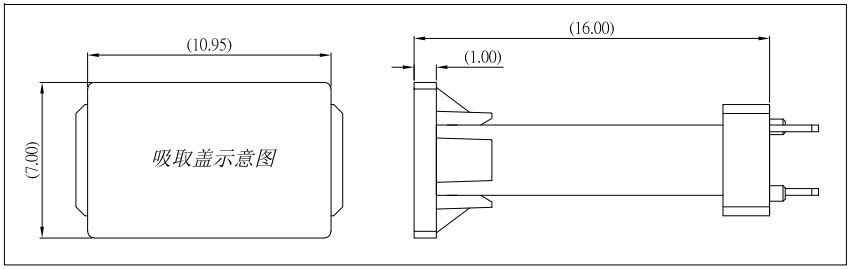

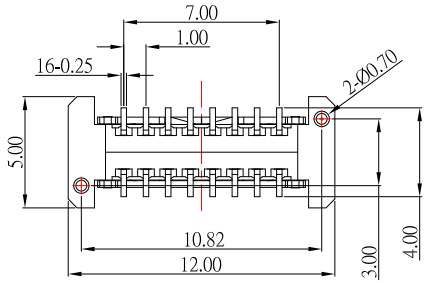

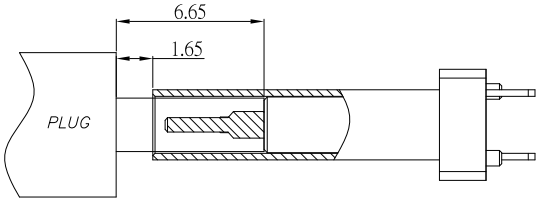

AFTER MATING

SPECIFICATIONS

Electrical:

1.Rating: 5.0A

2.Dielectric Withstand Voltage: 100V AC

3.Contact Resistance: 40 mΩ Max

4.Insulation Resistance: 100 MΩ Min

Mechanical:

1.Connector Mate and Unmate Force

1.1 Mate force: 5~20 N

1.2 Unmate force: 8~20 N

MATERIAL:

1.Housing: LCP

2.Contact: C7025

3.Shell: SUS

Finish:

1.Contact: Plated Gold in Mating Area ;
Gold Plated on Solder Balls ;
Nickel under plated overall

2.Shell: Nickel under Plated surface layer

ITEM NO.	DESCRIPTION	DRAWN	DATE
18	更新圖面	Jack	032526
17	新增Housing Color選項	Jack	032825
16	新增PCB LAYOUT樣式尺寸	Jack	042823
15	刪除高度尺寸8.8選項	Jack	040623
14	新增高度尺寸選項	Jack	030123
13	更新料號	Jack	011823

CONTACT 建倚科技股份有限公司
CONTACT TECHNOLOGY CORP.

TOLERANCE UNLESS OTHERWISE STATED :
Up to 5 ±0.2
Above 5 ~ 15 ±0.3
Above 15 ~ 30 ±0.4
Above 30 ~ 50 ±0.5
Angle ±0.3°

3RD. ANGEL'S | UNITS | MM

		DATE
DRAWN BY:	Jack Lu	03/25/26
CHECKED BY:	Jacky Chen	03/25/26
APPROVED BY:	Tony Kao	03/25/26

MAT'L		TITLE	CONNECTOR
FINISH		MODLE	TYPE C 16P 180 度 SMT 帶定位柱
SCALE	1 : 1	DWG NO.	SBC-160VSEx-20xx-S412
SHEET NO.	1 of 1	PART NO.	SBC-160VSEx-20xx-S412

SIZE A4 | VER R18