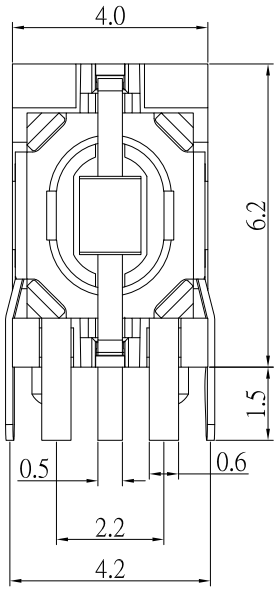

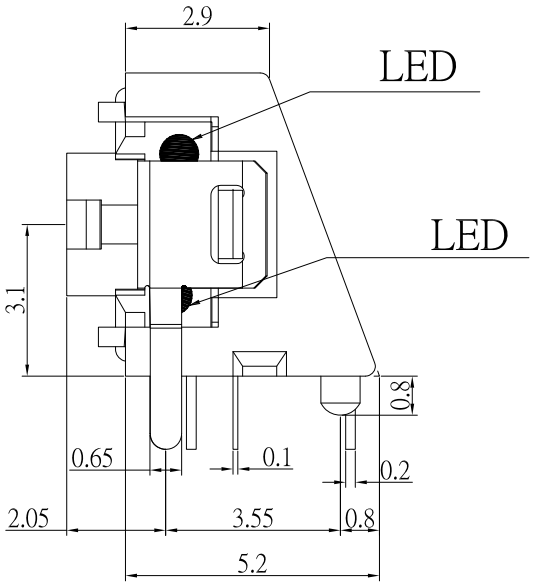

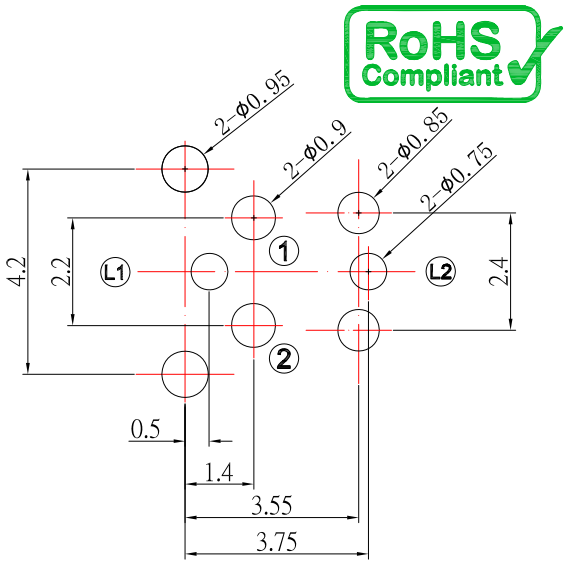

P.C.B LAYOUT

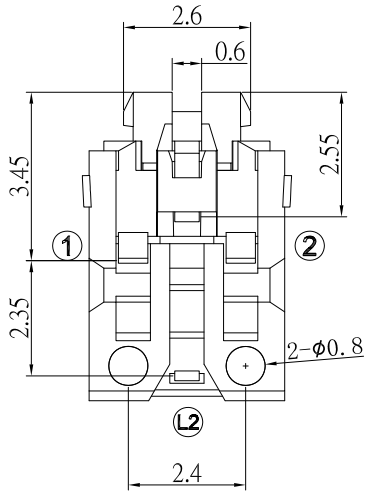

TS-H7-xx-E0RL-S065

COLOR OF LED

0	Without	1	Red
2	Green	3	Orange
4	Yellow	7	Blue
8	White		

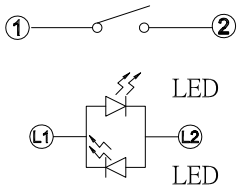

SCHEMATIC

SPECIFICATIONS

Rating	DC 12V 50 mA Max.
Contact Resistance	500 mΩ Max.
Insulation Resistance	100 V DC , 100 MΩ Min.
Operating Temperature	-20˚C ~ +70˚C
Operating Force	160 ± 50gf
Operating Life (cycles)	100,000

NO.	PART NAME	QTY	MATERIAL	SPECIAL DEAL
1	BRACKET	1	LCP	WHITE
2	BASE FRAME	1	LCP	WHITE
	TERMINAL	1	PHOSPHOR BRONZE	SILVER PLATING
3	SPRING PLATE	1	STAINLESS STEEL	SILVER PLATING
4	ACTUATOR	1	PA6T	WHITE
5	FRAME	1	STAINLESS STEEL	TIN PLATING
	LED	1		

ITEM NO.	DESCRIPTION	DRAWN	DATE
2	更新料號	Jack	112618
1	新增材質表	Jack	092818

CONTACT 建倚科技股份有限公司
CONTACT TECHNOLOGY CORP.

TOLERANCE UNLESS OTHERWISE STATED : Up to 5 ±0.2; Above 5 ~ 15 ±0.3; Above 15 ~ 30 ±0.4; Above 30 ~ 50 ±0.5; Angle ±0.3˚

3RD. ANGEL'S | UNITS MM

		DATE
DRAWN BY:	Jack Lu	11/26/18
CHECKED BY:	Jacky Chen	11/26/18
APPROVED BY:	Tony Kao	11/26/18

MAT'L		TITLE	SWITCH		
FINISH		MODLE	TACT SWITCH W/I LED		
SCALE	1 : 1	DWG NO.	TS-H7-xx-E0RL-S065	SIZE	A4
SHEET NO.	1 of 1	PART NO.	TS-H7-xx-E0RL-S065	VER	R2