IP67

RoHS Compliant

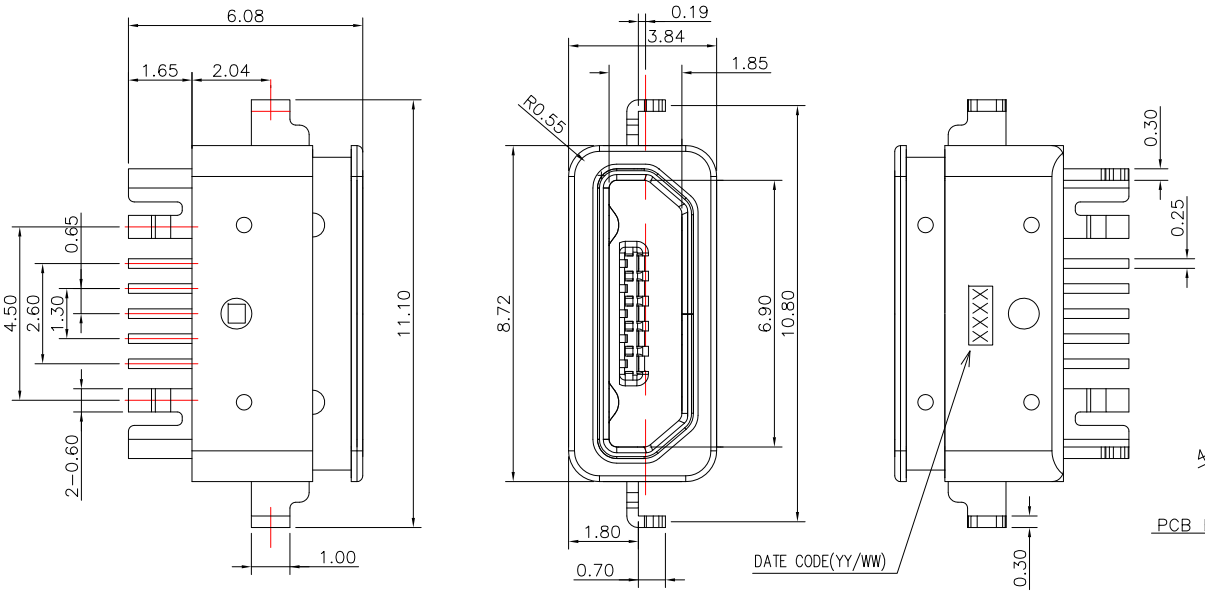

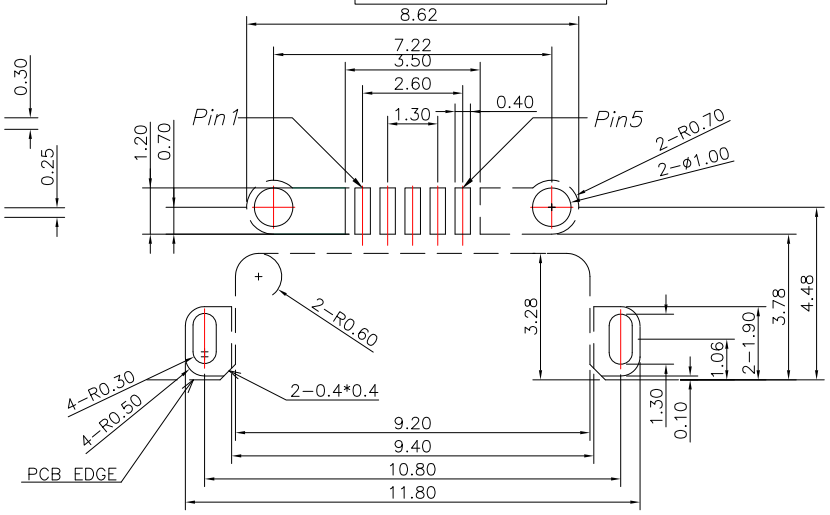

P.C.B LAYOUT MOUNTING PATTERN

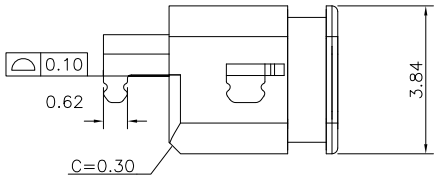

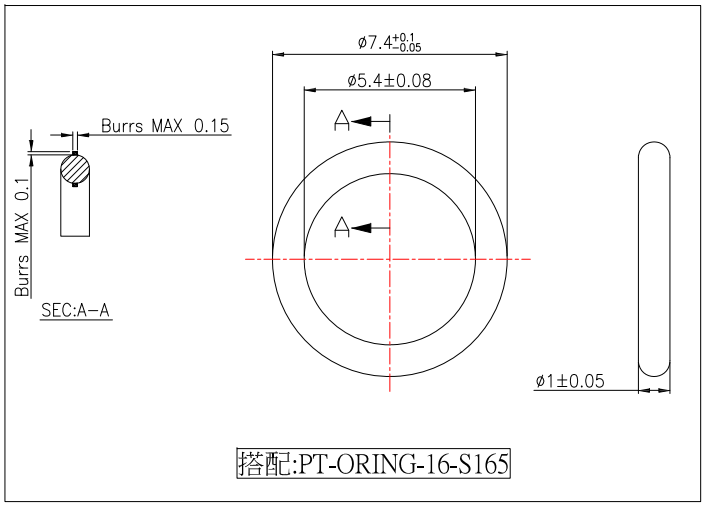

MRUSB-5B-WP13-x-S165

鍍層厚度：

Blank : 1u"
2 : 15u"
3 : 30u"

NOTES:

MATERIAL:

1.1 HOUSING: THERMOPLASTIC

1.2 CONTACT: COPPER ALLOY

1.3 SHELL: SUS

1.4 O-RING: SILICON

FINISH:

2.1 CONTACT: PLATED GOLD IN MATING AREA ;
GOLD PLATED ON SOLDER BALLS ;
NICKEL UNDER PLATED OVERALL

2.2 SHELL: NICKEL UNDER PLATED SURFACE LAYER

3.SPECIFICATION:

3.1 RATING: 1.0A

3.2 DIELECTRIC WITHSSTANDING VOLTAGE: 500 VAC

3.3 CONTACT RESISTANCE: 30 mΩ MAX.

3.4 INSULATION RESISTANCE: 1000 MΩ MIN.

ITEM NO.	DESCRIPTION	DRAWN	DATE
5	新增O-RING圖	Jack	102920
5	刪除O-RING圖	Jack	040819
4	更新樣式	Jack	032119
3	新增O-RING圖	Jack	112618
2	新增尺寸	Jack	073118
1	更新為A0版	Jack	071718

CONTACT 建倚科技股份有限公司
CONTACT TECHNOLOGY CORP.

TOLERANCE UNLESS OTHERWISE STATED : Up to 5 ±0.2; Above 5 ~ 15 ±0.3; Above 15 ~ 30 ±0.4; Above 30 ~ 50 ±0.5; Angle ±0.3°

3RD. ANGEL'S | UNITS | MM

DRAWN BY: Jack Lu	DATE 10/29/20	MAT'L	
CHECKED BY: Jacky Chen	DATE 10/29/20	FINISH	
APPROVED BY: Tony Kao	DATE 10/29/20	SCALE 1 : 1	SHEET NO. 1 of 1

TITLE	CONNECTOR		
MODLE	MICRO USB 5PF B TYPE 沉板 板上 H 1.8 IP67		
DWG NO.	MRUSB-5B-WP13-x-S165	SIZE	A4
PART NO.	MRUSB-5B-WP13-x-S165	VER	R6