IPX7

RoHS Compliant

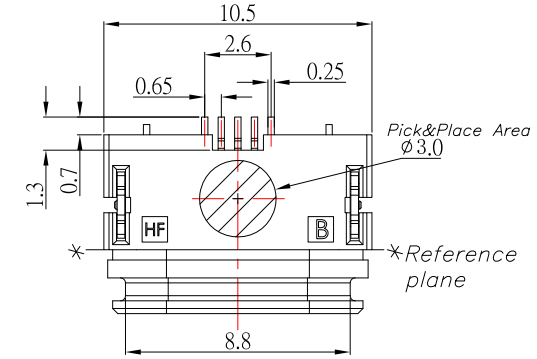

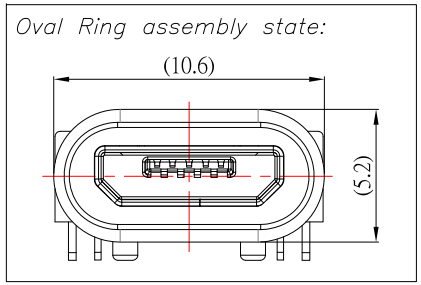

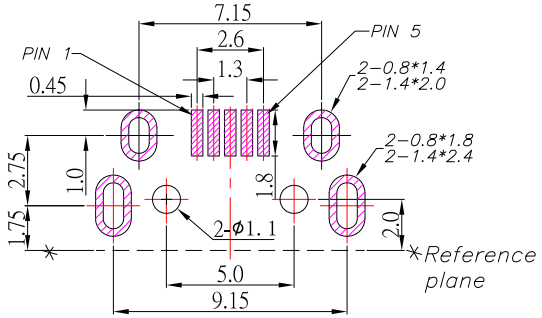

P.C.B LAYOUT MOUNTING PATTERN
TOP VIEW

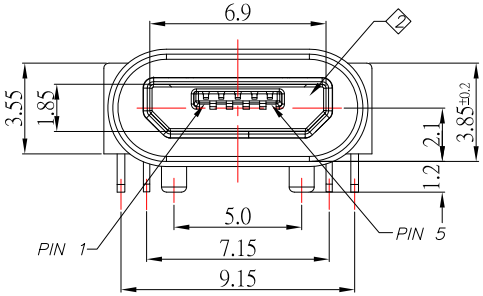

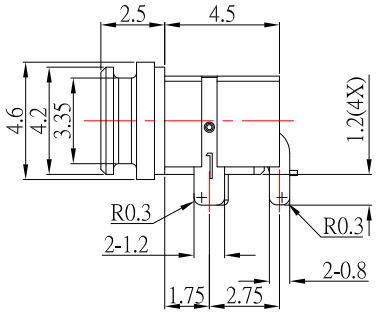

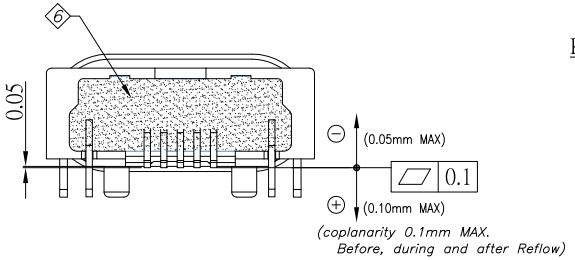

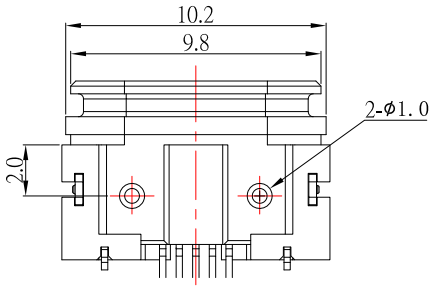

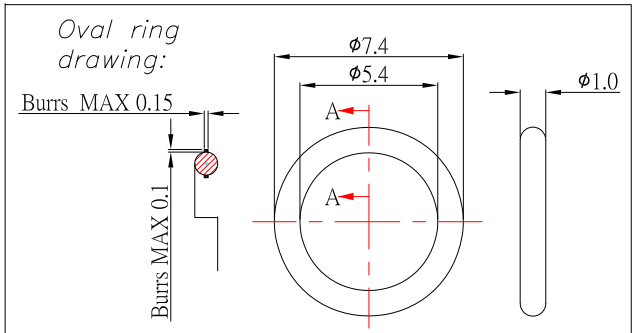

P/N:PT-ORING-4-S404

Note:Waterproof ring need not assembled on the product, to form a complete set of product shipped separately.

NOTES:

MATERIAL:

1.1 HOUSING: PA9T

1.2 INSERT MOLDING: LCP

1.3 CONTACT: COPPER ALLOY

1.4 SHELL: SUS

1.5 TERMINAL: BRASS

1.6 WATERPROOF RING: SILICONE RUBBER

FINISH:

2.1 CONTACT: PLATED GOLD IN MATING AREA ;
TIN PLATED ON SOLDER BALLS ;
NICKEL UNDER PLATED OVERALL

2.2 SHELL: NICKEL UNDER PLATED SURFACE LAYER

2.3 TERMINAL: TIN PLATED

3.SPECIFICATION:

3.1 RATING: 1.8A(PIN1&5) , 0.5A(PIN2&3&4)

3.2 DIELECTRIC WITHSSTANDING VOLTAGE: 300 VAC

3.3 CONTACT RESISTANCE: 30 mΩ MAX.

3.4 INSULATION RESISTANCE: 100 MΩ MIN.

ITEM NO.	DESCRIPTION	DRAWN	DATE
5	新增ORING料號	Jack	031519
4	更新MODLE	Jack	030719
3	更新料號	Jack	030619
2	更新圖面	Jack	102318
1	更新為A0版	Jack	072018

CONTACT 建倚科技股份有限公司
CONTACT TECHNOLOGY CORP.

TOLERANCE UNLESS OTHERWISE STATED : Up to 5 ±0.2; Above 5 ~ 15 ±0.3; Above 15 ~ 30 ±0.4; Above 30 ~ 50 ±0.5; Angle ±0.3°

3RD. ANGEL'S | UNITS | MM

DRAWN BY: Jack Lu	DATE 03/15/19	MAT'L	
CHECKED BY: Jacky Chen	DATE 03/15/19	FINISH	
APPROVED BY: Tony Kao	DATE 03/15/19	SCALE 1 : 1	SHEET NO. 1 of 1

TITLE	CONNECTOR		
MODLE	MICRO USB 5PF B TYPE 防水型 IPX7 後檔板4.6mm		
DWG NO.	MRUSB-5B-WP7-S404	SIZE	A4
PART NO.	MRUSB-5B-WP7-S404	VER	R5