# IPX7

RoHS Compliant

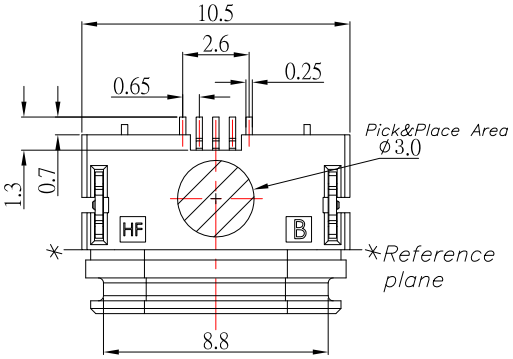


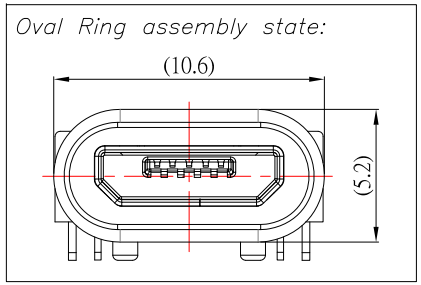


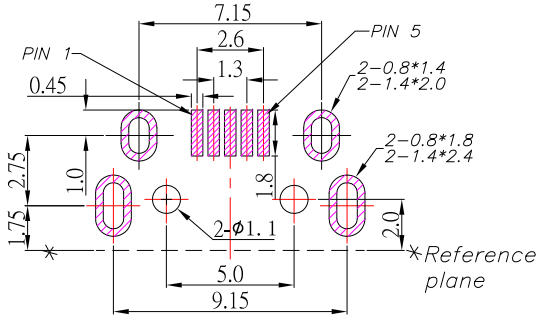


P.C.B LAYOUT MOUNTING PATTERN
TOP VIEW

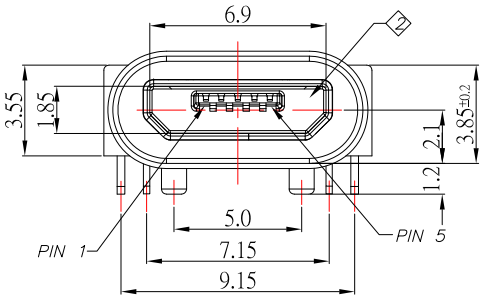


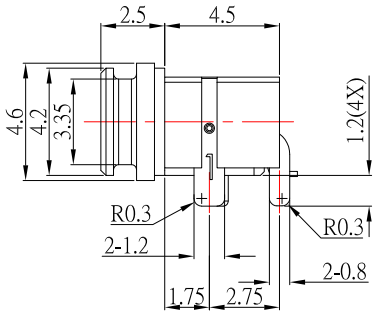


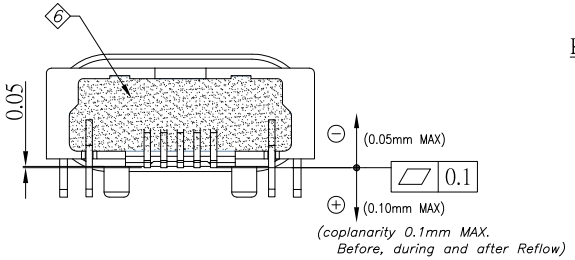


(coplanarity 0.1mm MAX.
Before, during and after Reflow)

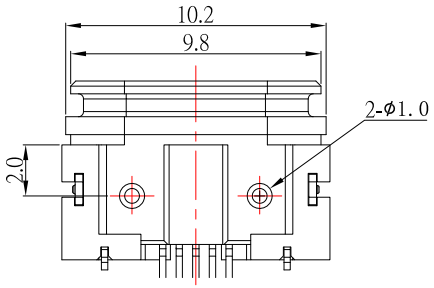


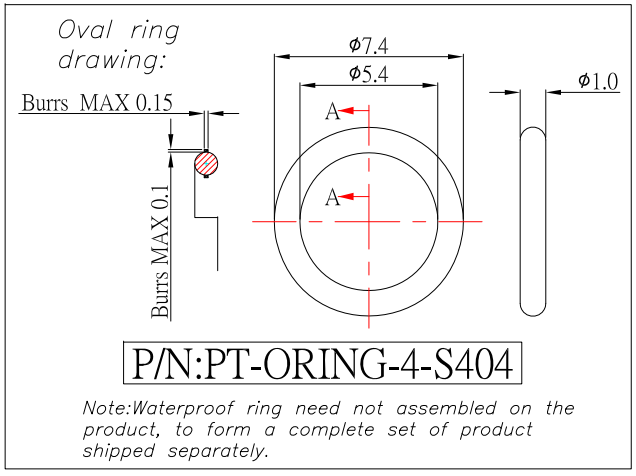


P/N:PT-ORING-4-S404

Note:Waterproof ring need not assembled on the product, to form a complete set of product shipped separately.

NOTES:
MATERIAL:
1.1 HOUSING: PA9T
1.2 INSERT MOLDING: LCP
1.3 CONTACT: COPPER ALLOY
1.4 SHELL: SUS
1.5 TERMINAL: BRASS
1.6 WATERPROOF RING: SILICONE RUBBER
FINISH:
2.1 CONTACT: PLATED GOLD IN MATING AREA ;
TIN PLATED ON SOLDER BALLS ;
NICKEL UNDER PLATED OVERALL
2.2 SHELL: NICKEL UNDER PLATED SURFACE LAYER
2.3 TERMINAL: TIN PLATED
3.SPECIFICATION:
3.1 RATING: 1.8A(PIN1&5) , 0.5A(PIN2&3&4)
3.2 DIELECTRIC WITHSSTANDING VOLTAGE: 300 VAC
3.3 CONTACT RESISTANCE: 30 mΩ MAX.
3.4 INSULATION RESISTANCE: 100 MΩ MIN.

| ITEM NO. | DESCRIPTION | DRAWN | DATE |
|---|---|---|---|
| 5 | 新增ORING料號 | Jack | 031519 |
| 4 | 更新MODLE | Jack | 030719 |
| 3 | 更新料號 | Jack | 030619 |
| 2 | 更新圖面 | Jack | 102318 |
| 1 | 更新為A0版 | Jack | 072018 |

CONTACT 建倚科技股份有限公司
CONTACT TECHNOLOGY CORP.

TOLERANCE UNLESS OTHERWISE STATED : Up to 5 ±0.2; Above 5 ~ 15 ±0.3; Above 15 ~ 30 ±0.4; Above 30 ~ 50 ±0.5; Angle ±0.3°

3RD. ANGEL'S | UNITS MM

| | | DATE |
|---|---|---|
| DRAWN BY: | Jack Lu | 03/15/19 |
| CHECKED BY: | Jacky Chen | 03/15/19 |
| APPROVED BY: | Tony Kao | 03/15/19 |

| | | | |
|---|---|---|---|
| MAT'L | | TITLE | CONNECTOR |
| FINISH | | MODLE | MICRO USB 5PF B TYPE 防水型 IPX7 後檔板4.6mm |
| SCALE | 1 : 1 | DWG NO. | MRUSB-5B-WP7-S404 |
| SHEET NO. | 1 of 1 | PART NO. | MRUSB-5B-WP7-S404 |

SIZE A4 | VER R5