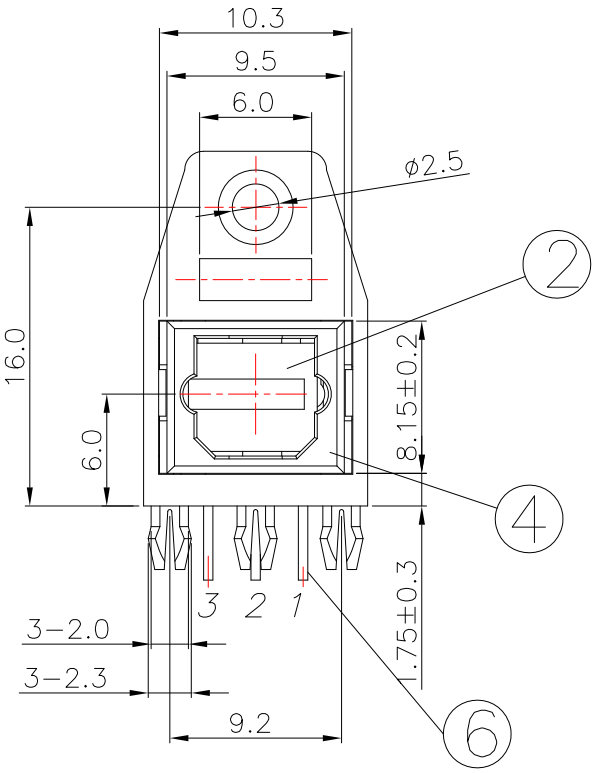

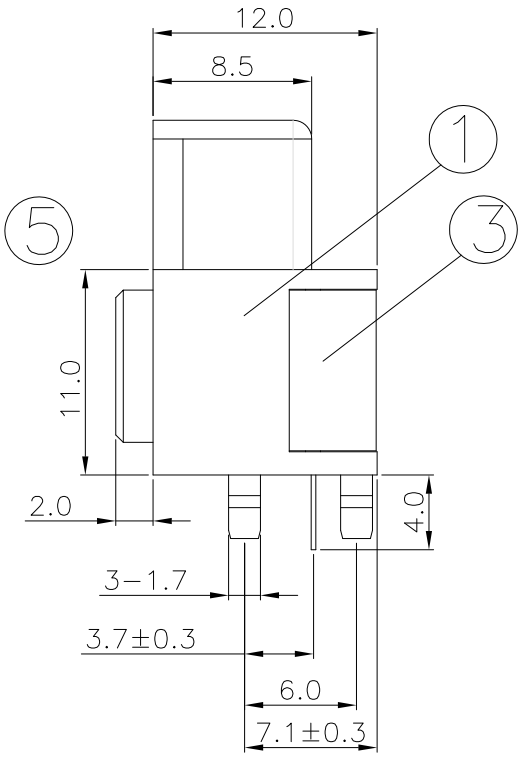

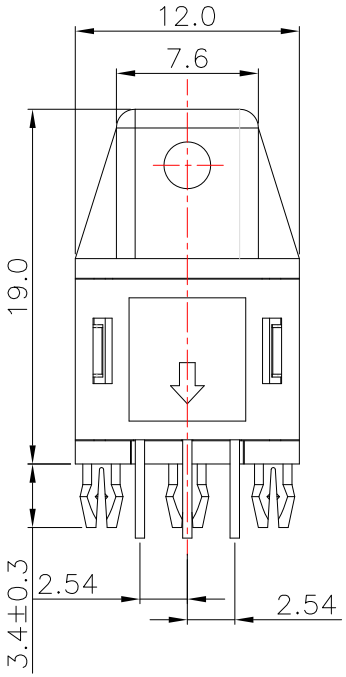

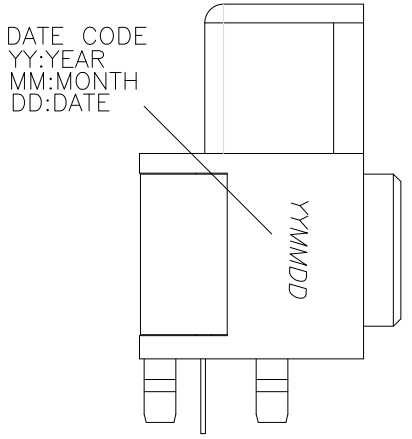

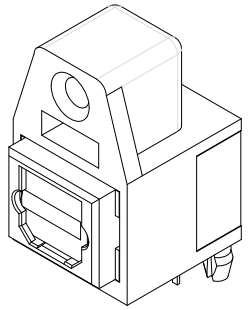

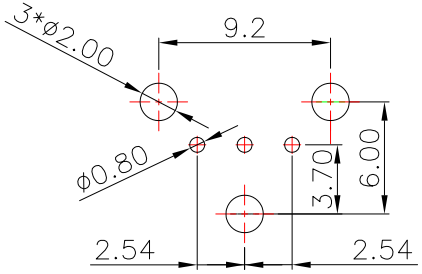

PCB LAYOUT
TOP VIEW

PIN FUNCTION
Pin1: GND
Pin2: Vcc
Pin3: Vin

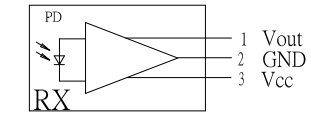

TRANSMITTER

NO.	DESCRIPTION	QTY	MATERIAL	REMARK
6	POF	1	DLR1202	
5	SPRING	1	SUS	
4	SET	1	PA66	BLACK
3	BACK COVER	1	PA66	BLACK
2	SHUTTER	1	PA66	BLACK
1	HOUSING	1	PA66	BLACK

ITEM NO.	DESCRIPTION	DRAWN	DATE
2	更新爲A0版	Jack	082917
1	更新尺寸	Jack	062317

CONTACT 建倚科技股份有限公司
CONTACT TECHNOLOGY CORP.

TOLERANCE UNLESS OTHERWISE STATED : Up to 5 ±0.2; Above 5 ~ 15 ±0.3; Above 15 ~ 30 ±0.4; Above 30 ~ 50 ±0.5; Angle ±0.3°

3RD. ANGEL'S | UNITS MM

DRAWN BY: Jack Lu	DATE 08/29/17	MAT'L	
CHECKED BY: Jacky Chen	DATE 08/29/17	FINISH	
APPROVED BY: Tony Kao	DATE 08/29/17	SCALE 1 : 1	SHEET NO. 1 of 1

TITLE	JACK		
MODLE	OPTICAL JACK 接收端		
DWG NO.	OJ-402C-RX-S214	SIZE	A4
PART NO.	OJ-402C-RX-S214	VER	A0