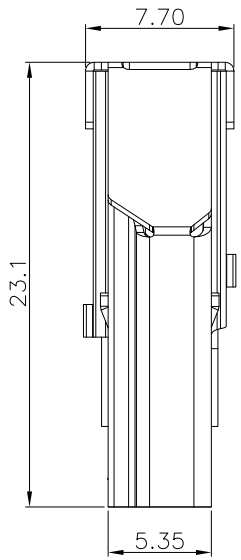

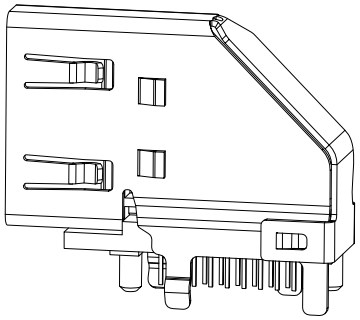

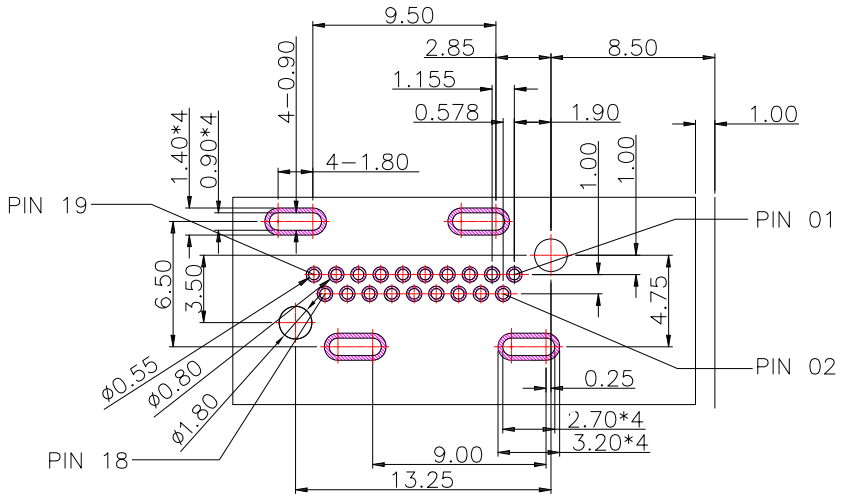

RECOMMENDED PCB LAYOUT(TOP VIEW)

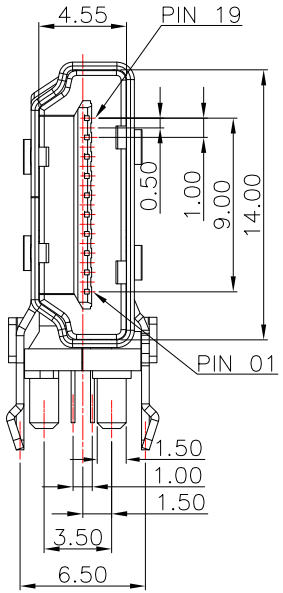

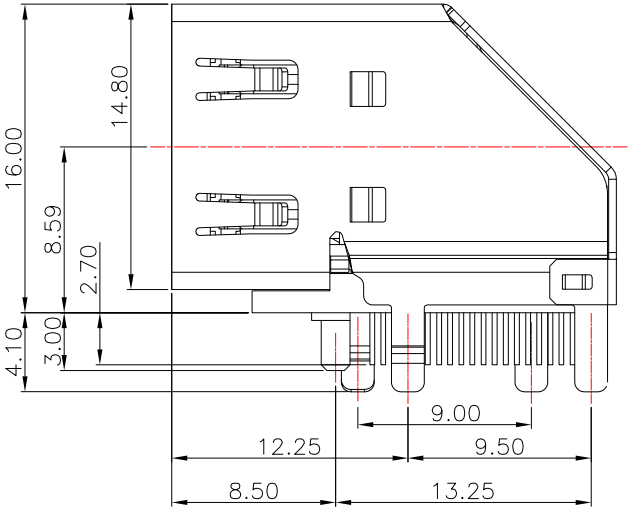

NOTE:

1.MATERIAL:

1.1 HOUSING: LCP,UL94V-0

1.2 CONTACT: PHOSPHOR BRONZE

1.3 SHEEL: BRASS

2.PLATING :

2.1 CONTACT: PLATED GOLD IN MATING AREA ;
TIN PLATED ON SOLDER BALLS ;
NICKEL UNDER PLATED OVERALL

2.2 SHELL: NICKEL UNDER PLATED SURFACE LAYER

ITEM NO.	DESCRIPTION	DRAWN	DATE
5	更新料號	Jack	042018
4	更新材質及鍍層	Jack	060617
3	新增尺寸	Jack	042617
2	新增PCB LAYOUT中PIN編號	Jack	042517
1	更新料號	Jack	022217

CONTACT 建倚科技股份有限公司
CONTACT TECHNOLOGY CORP.

TOLERANCE UNLESS OTHERWISE STATED : Up to 5 ±0.2; Above 5 ~ 15 ±0.3; Above 15 ~ 30 ±0.4; Above 30 ~ 50 ±0.5; Angle ±0.3°

3RD. ANGEL'S | UNITS | MM

DRAWN BY: Jack Lu	DATE 04/20/18	MAT'L	
CHECKED BY: Jacky Chen	DATE 04/20/18	FINISH	
APPROVED BY: Tony Kao	DATE 04/20/18	SCALE 1 : 1	SHEET NO. 1 of 1

TITLE	CONNECTOR		
MODLE	HDMI A/F 側插		
DWG NO.	HDMI-19PF-P1-S277	SIZE	A4
PART NO.	HDMI-19PF-P1-S277	VER	R5