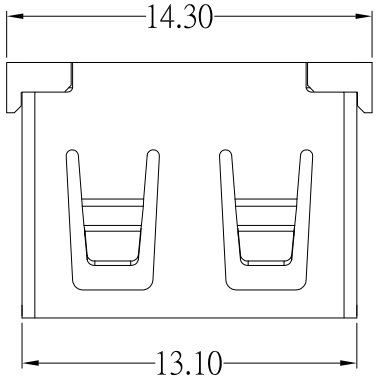

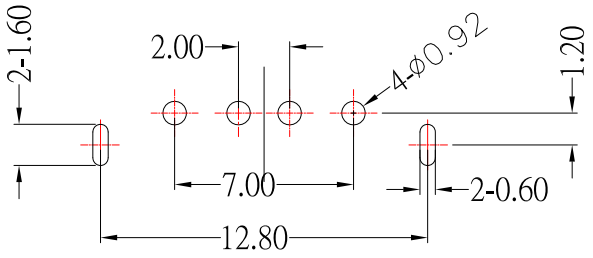

P.C.B LAYOUT MOUNTING PATTERN

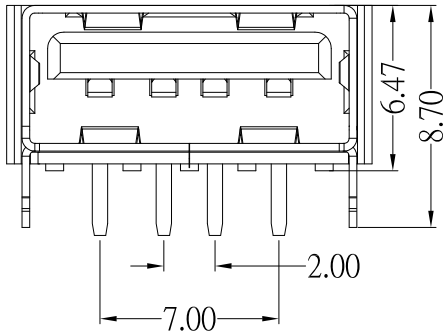

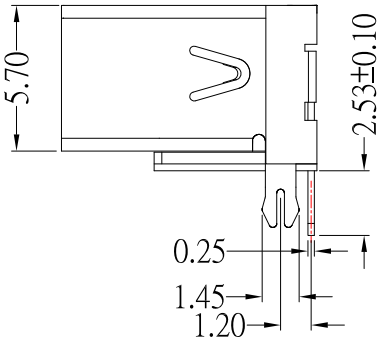

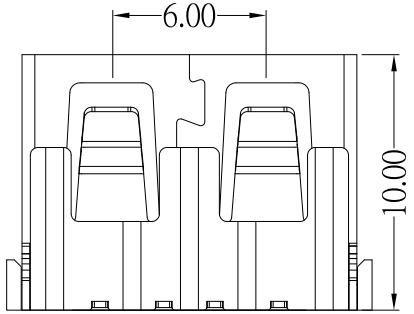

RoHS Compliant

SUA-110H26Ax-x-S236

SHELL :	COLOR :
Blank : BRASS	Black: B
I : SPCC	White : W

SPECIFICATIONS

Electrical:

1.Contact Resistance: 30 mΩ Max

2.Dielectric Withstanding Voltage: 500 V AC / 1 minute

3.Insulation Resistance: 1,000 MΩ Min

Mechanical:

1.Connector Mate and Unmate Force

1.1 Mate force: 35 N (Max)

1.2 Unmate force: 10N (Min)

Material:

1.Housing: LCP

2.Contact: Phosphor Bronze

3.Shell: Brass / Spcc

Finish:

1.Contact: Plated Gold in Mating Area ;
Tin Plated on Solder Balls ;
Nickel under plated overall

2.Shell: Nickel under Plated surface layer

ITEM NO.	DESCRIPTION	DRAWN	DATE
1	更新樣式	Lan	061119

CONTACT 建倚科技股份有限公司
CONTACT TECHNOLOGY CORP.

TOLERANCE UNLESS OTHERWISE STATED : Up to 5 ±0.2; Above 5 ~ 15 ±0.3; Above 15 ~ 30 ±0.4; Above 30 ~ 50 ±0.5; Angle ±0.3°

3RD. ANGEL'S | UNITS MM

		DATE
DRAWN BY:	Jack Lu	06/11/19
CHECKED BY:	Jacky Chen	06/11/19
APPROVED BY:	Tony Kao	06/11/19

MAT'L		TITLE	CONNECTOR
FINISH		MODLE	USB AF 短體10.0 後2 腳插板 無捲邊 H:6.47
SCALE	1 : 1	DWG NO.	SUA-110H26Ax-x-S236 SIZE A4
SHEET NO.	1 of 1	PART NO.	SUA-110H26Ax-x-S236 VER R1