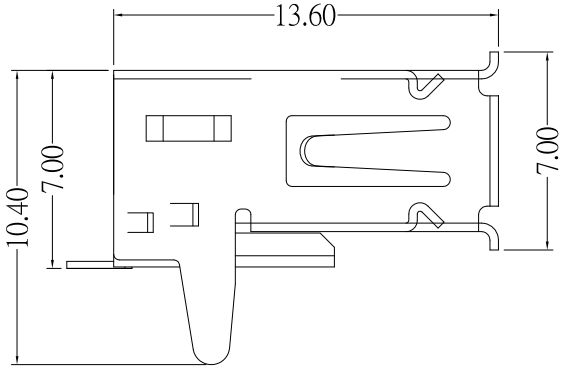

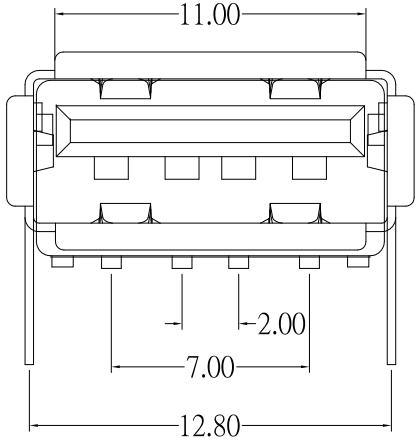

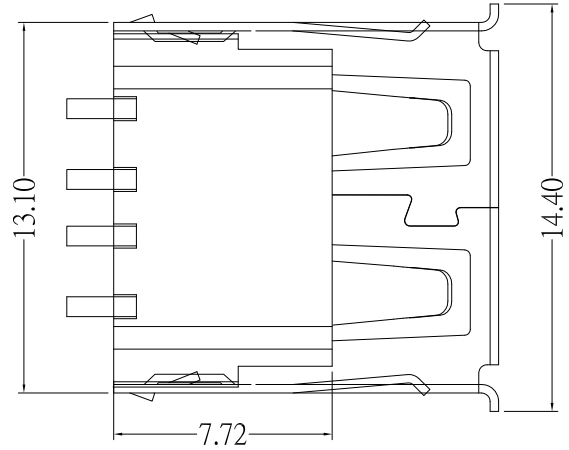

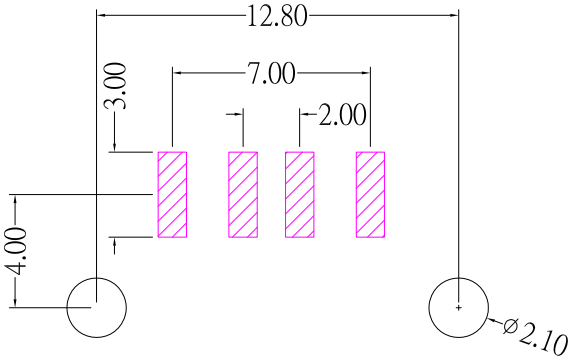

P.C.B LAYOUT

RoHS Compliant

SUA-110M22Bx-x-S236

Shell Material :

Blank : BRASS
I : SPCC

Color :

White : W
Black : B

SPECIFICATIONS

Electrical:

1.Contact Resistance: 30 mΩ Max

2.Insulation Resistance: 1,000 MΩ Min

3.Dielectric Withstanding Voltage: 500V AC

Material:

1.Housing: LCP

2.Contact: Phosphor Bronze

3.Shell: Brass / Spcc

Finish:

1.Contact: Plated Gold in Mating Area ;
Tin Plated on Solder Balls ;
Nickel under plated overall

2.Shell: Nickel under Plated surface layer

ITEM NO.	DESCRIPTION	DRAWN	DATE

CONTACT 建倚科技股份有限公司 CONTACT TECHNOLOGY CORP.

TOLERANCE UNLESS OTHERWISE STATED : Up to 5 ±0.2; Above 5 ~ 15 ±0.3; Above 15 ~ 30 ±0.4; Above 30 ~ 50 ±0.5; Angle ±0.3°

3RD. ANGEL'S | UNITS MM

DRAWN BY: Jack Lu	DATE 04/18/19	MAT'L		TITLE	CONNECTOR		
CHECKED BY: Jacky Chen	DATE 04/18/19	FINISH		MODLE	USB 2.0 AF R/A SMT 外殼直腳 無後蓋		
APPROVED BY: Tony Kao	DATE 04/18/19	SCALE	1 : 1	DWG NO.	SUA-110M22Bx-x-S236	SIZE	A4
		SHEET NO.	1 of 1	PART NO.	SUA-110M22Bx-x-S236	VER	R