

MRUSB-5B-RV6x-S331

SHELL鍍層:

TN
NI

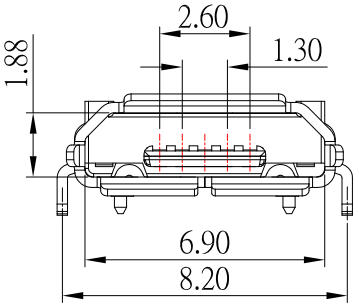

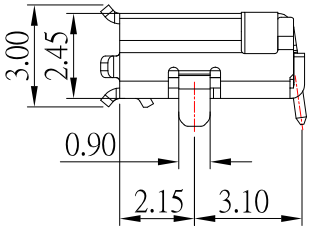

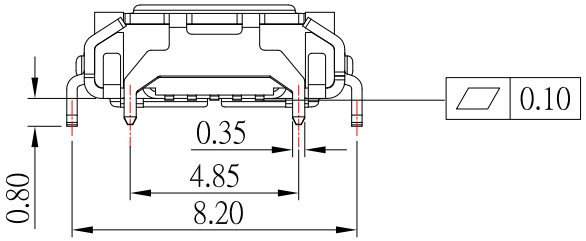

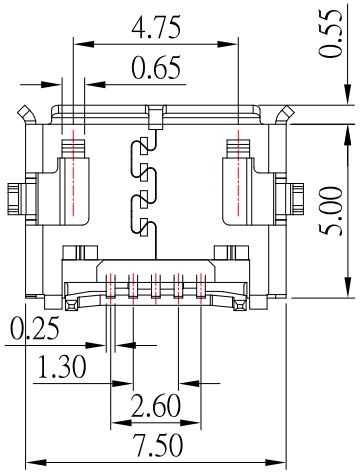

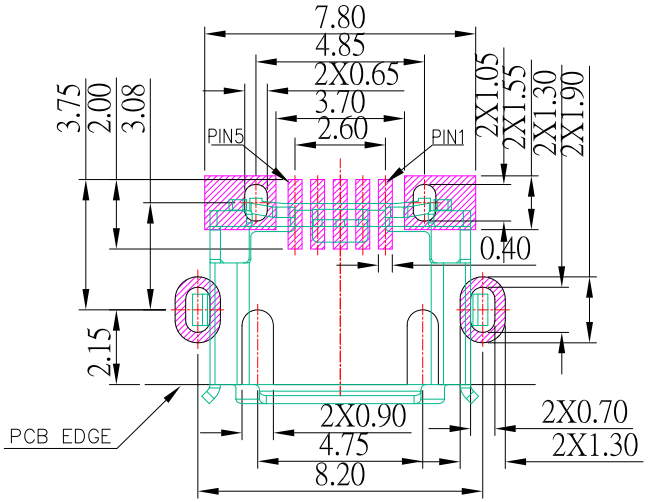

P.C.B LAYOUT MOUNTING PATTERN

NOTES:

MATERIAL:

1.1 HOUSING: LCP,Black

1.2 CONTACT: BRASS

1.3 SHELL: SUS

Finish:

2.1 Contact: Plated Gold in Mating Area ;
Gold Plated on Solder Balls
Nickel under plated overall

2.2 Shell: Tin under Plated surface layer

3.SPECIFICATION:

3.1 RATING: 30V AC , 0.5 A(2,3,4 pin) ; 1.8 A(1,5 pin)

3.2 DIELECTRIC WITHSSTANDING VOLTAGE: 250 VAC

3.3 CONTACT RESISTANCE: 30 mΩ MAX.

3.4 INSULATION RESISTANCE: 100 MΩ MIN.

3.5 TEMPERATURE RANGE: -30˚C ~ +85˚C

ITEM NO.	DESCRIPTION	DRAWN	DATE
1	新增SHELL鍍層選項及更新pcb layout	Jack	022519

CONTACT 建倚科技股份有限公司
CONTACT TECHNOLOGY CORP.

TOLERANCE UNLESS OTHERWISE STATED :
Up to 5 ± 0.2
Above 5 ~ 15 ± 0.3
Above 15 ~ 30 ± 0.4
Above 30 ~ 50 ± 0.5
Angle ± 0.3°

3RD. ANGEL'S | UNITS | MM

		DATE
DRAWN BY:	Jack Lu	02/25/19
CHECKED BY:	Jacky Chen	02/25/19
APPROVED BY:	Tony Kao	02/25/19

MAT'L		TITLE	CONNECTOR
FINISH		MODLE	MICRO USB 反向 外殼4 腳插板 (PH8.2-4.85mm)
SCALE	1 : 1	DWG NO.	MRUSB-5B-RV6x-S331
SHEET NO.	1 of 1	PART NO.	MRUSB-5B-RV6x-S331

SIZE A4 | VER R