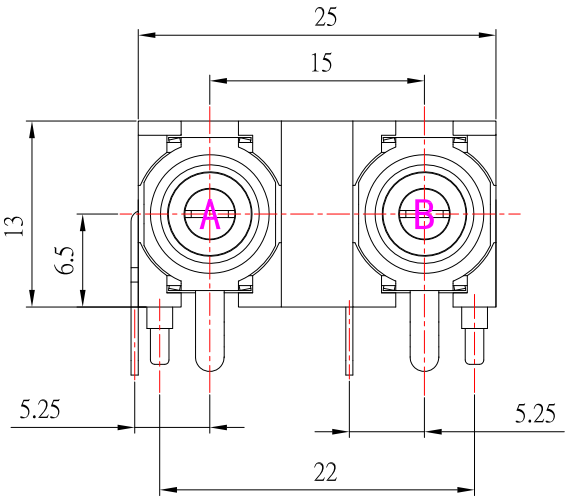

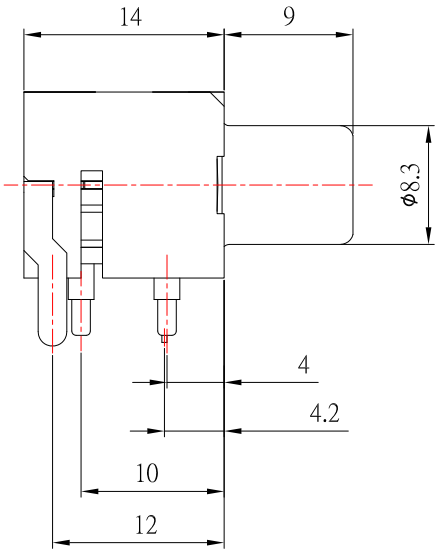

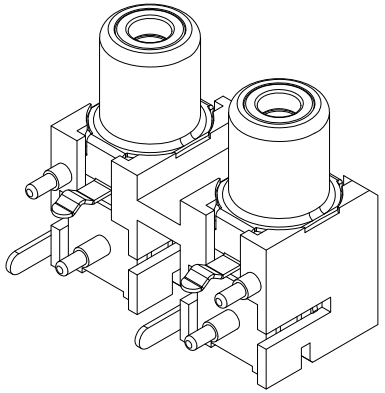

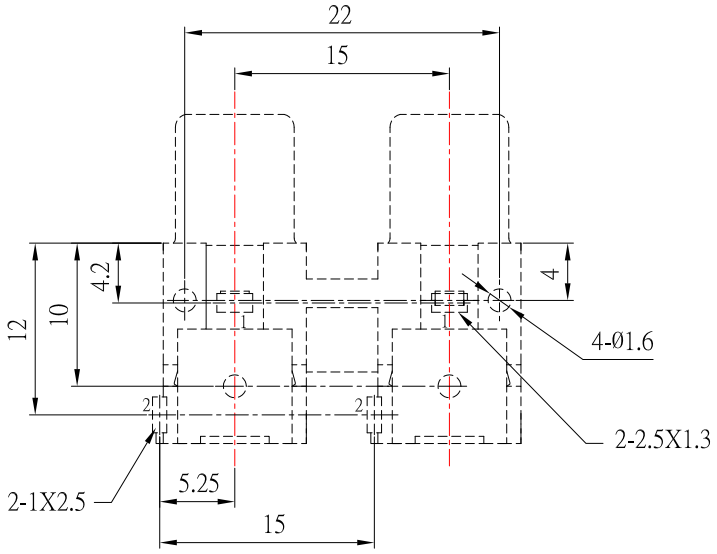

PCB HOLES DIAGRAM
BOTTOM VIEW

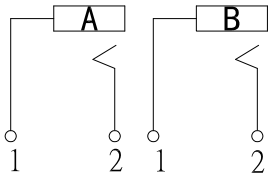

CIRCUIT DIAGRAM

COLOR TYPE		
P/N	A	B
R :	RED	
K :	BLACK	
Y :	YELLOW	
W :	WHITE	
G :	GREEN	
B :	BLUE	
O :	ORANGE	

ITEM NO.	DESCRIPTION	DRAWN	DATE
1	圖面更新	FrankWu	120111

CONTACT 建倚科技股份有限公司
CONTACT TECHNOLOGY CORP.

TOLERANCE UNLESS OTHERWISE STATED : Up to 5 ±0.2; Above 5 ~ 15 ±0.3; Above 15 ~ 30 ±0.4; Above 30 ~ 50 ±0.5; Angle ±0.3°

3RD. ANGEL'S | UNITS MM

DRAWN BY: Frank Wu	DATE 12/01/11	MAT'L	
CHECKED BY: Jacky Chen	DATE 12/01/11	FINISH	
APPROVED BY: Tony Kao	DATE 12/01/11	SCALE 1 : 1	SHEET NO. 1 of 1

TITLE	JACK		
MODLE	RCA JACK		
DWG NO.	RCA-216-xx-S147	SIZE	A4
PART NO.	RCA-216-xx-S147	VER	B