RoHS Compliant

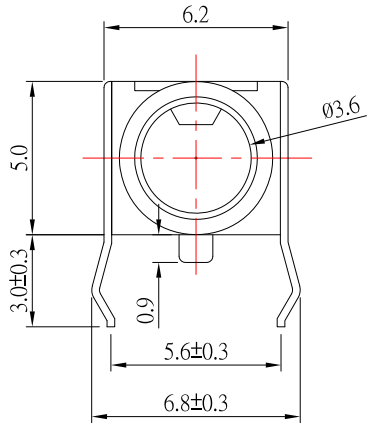

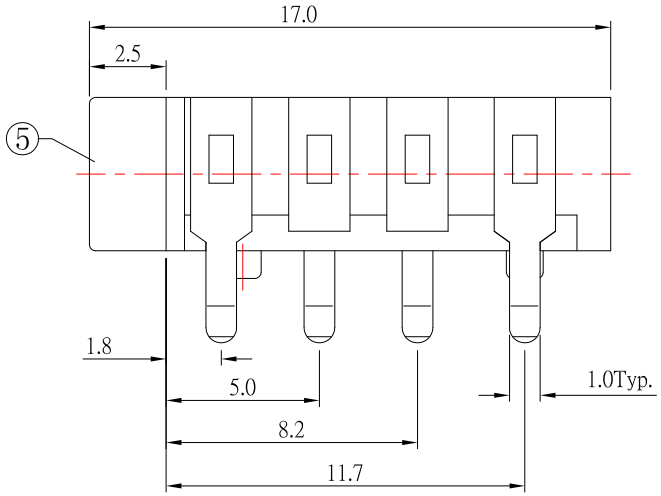

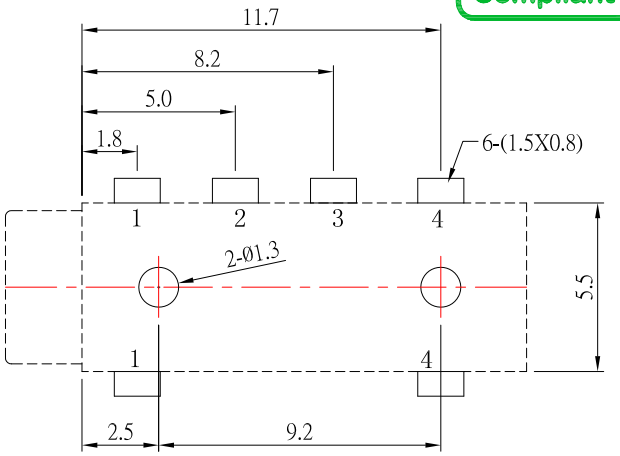

P.C.B LAYOUT
TOP VIEW

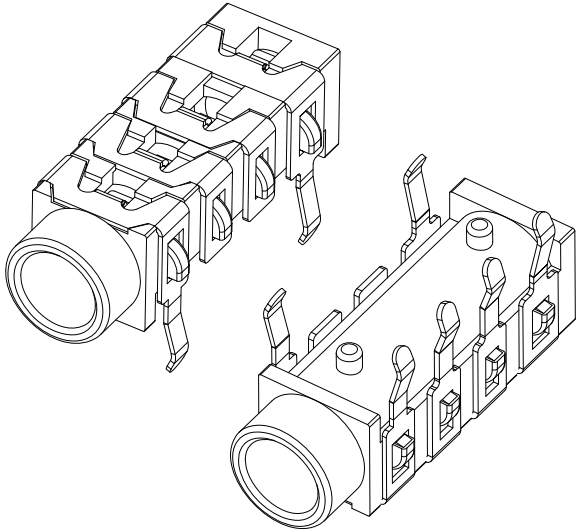

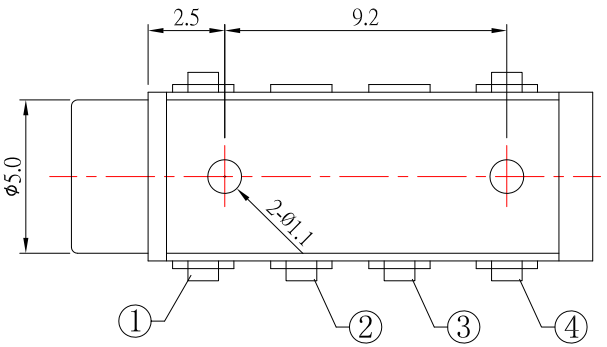

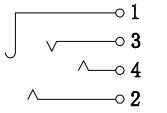

SCHEMATIC

SPECIFICATION

1.Rating ：DC 30V 1.0A
2.Contact resistance：≤30mΩ
3.Insulation resistance：≥100MΩ
4.Withstand voltage：500VAC
5.Insertion and extraction force：3-20N
6.life test：5,000 cycles

NO.	DESCRIPTION	QTY	MATERIAL	PLATING
5	HOUSING	1	PBT	
4	CONTACT FOOT	1	SUS301	Sn-Plating
3	CONTACT FOOT	1	SUS301	Sn-Plating
2	CONTACT FOOT	1	SUS301	Sn-Plating
1	CONTACT FOOT	1	SUS301	Sn-Plating

ITEM NO.	DESCRIPTION	DRAWN	DATE

CONTACT 建倚科技股份有限公司
CONTACT TECHNOLOGY CORP.

TOLERANCE UNLESS OTHERWISE STATED :
Up to 5 ±0.2
Above 5 ~ 15 ±0.3
Above 15 ~ 30 ±0.4
Above 30 ~ 50 ±0.5
Angle ±0.3°

3RD. ANGEL'S | UNITS MM

DRAWN BY: Jack Lu	DATE 06/26/14	MAT'L	
CHECKED BY: Jacky Chen	DATE 06/26/14	FINISH	
APPROVED BY: Tony Kao	DATE 06/26/14	SCALE 1 : 1	SHEET NO. 1 of 1

TITLE	JACK
MODLE	PHONE JACK
DWG NO.	PJ-D3013B-S125
PART NO.	PJ-D3013B-S125
SIZE	A4
VER	R