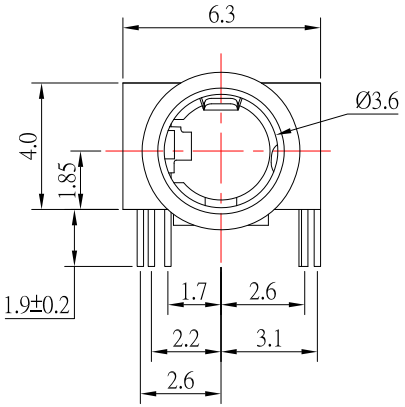

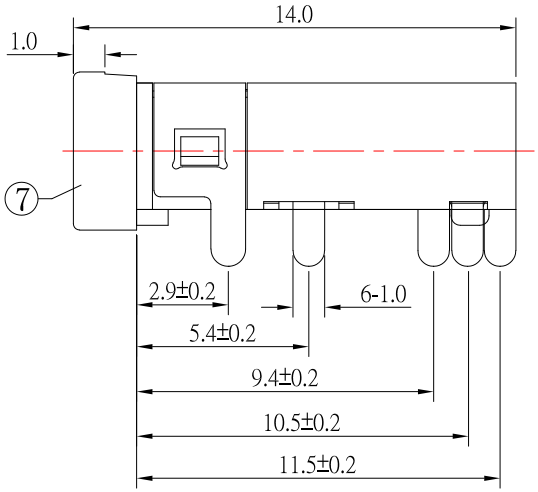

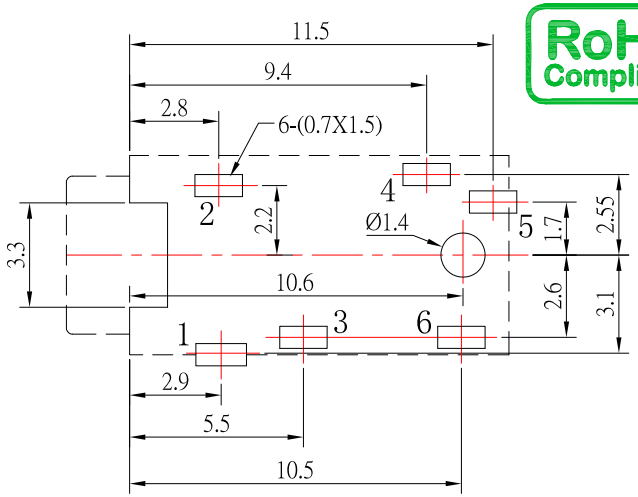

P.C.B LAYOUT
TOP VIEW

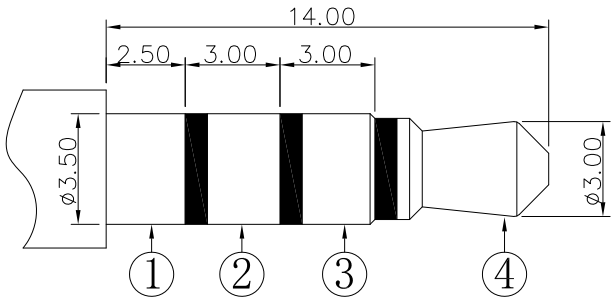

ø3.50mm 4 POLE PLUG

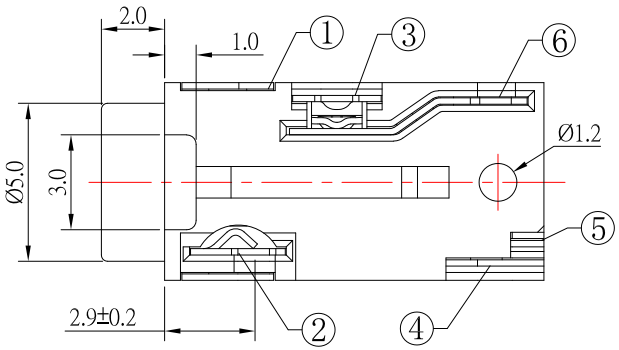

SCHEMATIC

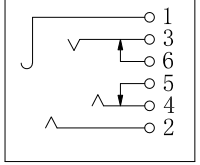

SPECIFICATION

1.Rating ：DC 30V, 1.0A；
2.Contact resistance：≤30mΩ；
3.Insulation resistance：≥100MΩ；
4.Withstand voltage：500VAC；
5.Insertion and extraction force：3-30N;
6.life test：5,000 cycles。

NO.	DESCRIPTION	QTY	MATERIAL	PLATING
7	HOUSING	1	PA9T	
6	6# CONTACT FOOT	1	PHOSPHOR BRONZE	Au-Plating
5	5# CONTACT FOOT	1	PHOSPHOR BRONZE	Au-Plating
4	4# CONTACT FOOT	1	PHOSPHOR BRONZE	Au-Plating
3	3# CONTACT FOOT	1	PHOSPHOR BRONZE	Au-Plating
2	2# CONTACT FOOT	1	PHOSPHOR BRONZE	Au-Plating
1	1# CONTACT FOOT	1	PHOSPHOR BRONZE	Au-Plating

ITEM NO.	DESCRIPTION	DRAWN	DATE
9	更新尺寸及材質	Jack	091324
8	更新SCHEMATIC選項	Jack	032222
7	更新尺寸及材質	Jack	061219
6	更新SCHEMATIC選項	Jack	041819

CONTACT 建倚科技股份有限公司
CONTACT TECHNOLOGY CORP.

TOLERANCE UNLESS OTHERWISE STATED：
Up to 5 ±0.2
Above 5 ~ 15 ±0.3
Above 15 ~ 30 ±0.4
Above 30 ~ 50 ±0.5
Angle ±0.3°

3RD. ANGEL'S | UNITS MM

DRAWN BY: Jack Lu	DATE 09/13/24	MAT'L	
CHECKED BY: Jacky Chen	DATE 09/13/24	FINISH	
APPROVED BY: Tony Kao	DATE 09/13/24	SCALE	1 : 1
		SHEET NO.	1 of 1

TITLE	JACK
MODLE	PHONE JACK
DWG NO.	PJ-3956-S124
PART NO.	PJ-3956-S124
SIZE	A4
VER	R9