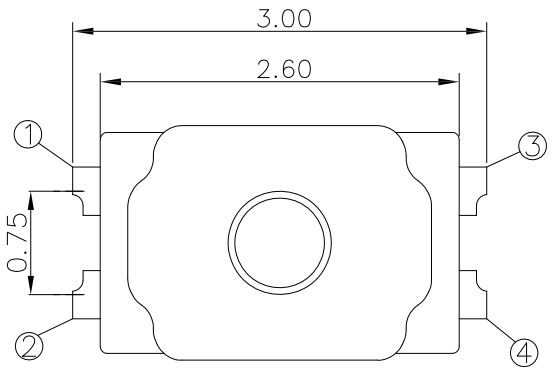

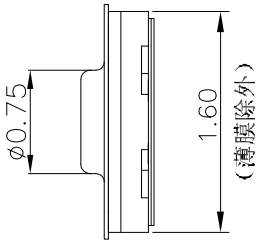

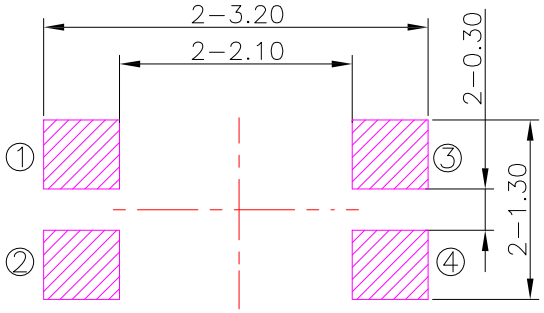

P.C.B LAND PATTERN

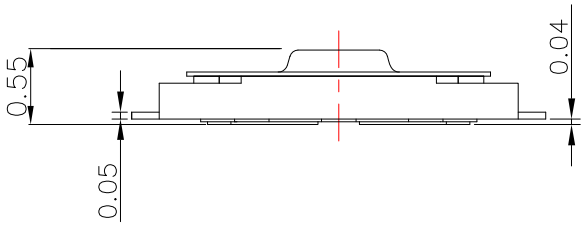

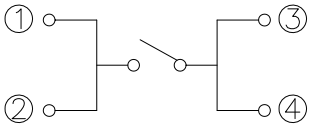

CIRCUIT DIAGRAM

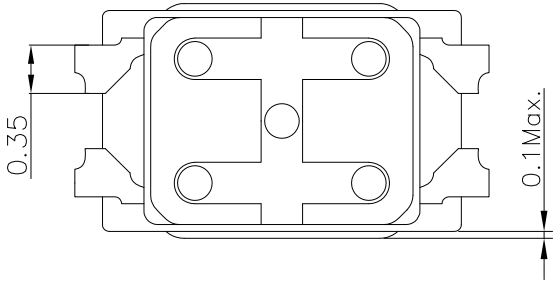

SPECIFICATIONS

Rating	50mA 12V DC			
Travel	0.13±0.05mm			
Dielectric Withstanding Voltage	AC 250 V			
Contact Resistance	100mΩ Max.			
Operating Force	2	160 ± 50gf	3	260 ± 50gf
Operating Life(cycles)	200,000			

NO.	DESCRIPTION	QTY	MATERIAL	PLATING
E	STEM	1	PA9T(Black)	
D	DUSTPROOF FILM	1	PA9T(White)	
C	CONTACT	1	SUS	Ag plated
B	BASE	1	PA9T(Black)	
A	THERMINAL	4	PHOSPHOR BRONZE	Ag plated

ITEM NO.	DESCRIPTION	DRAWN	DATE
1	更新材質和Travel	Jack	042222

CONTACT 建倚科技股份有限公司
CONTACT TECHNOLOGY CORP.

TOLERANCE UNLESS OTHERWISE STATED: Up to 5 ±0.2; Above 5 ~ 15 ±0.3; Above 15 ~ 30 ±0.4; Above 30 ~ 50 ±0.5; Angle ±0.3°

3RD. ANGEL'S | UNITS MM

DRAWN BY: Jack Lu	DATE 04/22/22	MAT'L		TITLE	SWITCH
CHECKED BY: Jacky Chen	DATE 04/22/22	FINISH		MODLE	TACT SWITCH
APPROVED BY: Tony Kao	DATE 04/22/22	SCALE	1 : 1	DWG NO.	TS-A30-x-S410
		SHEET NO.	1 of 1	PART NO.	TS-A30-x-S410

SIZE A4 | VER R1