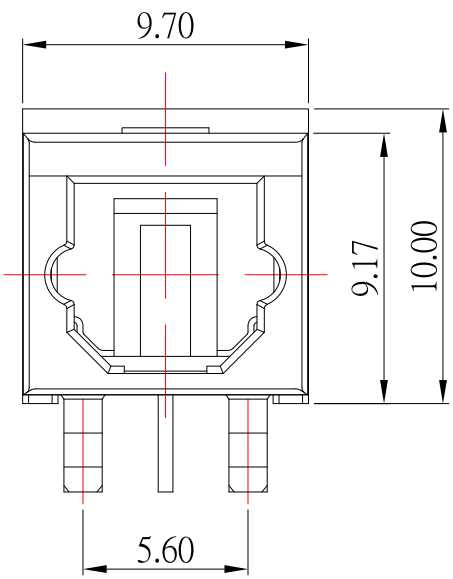

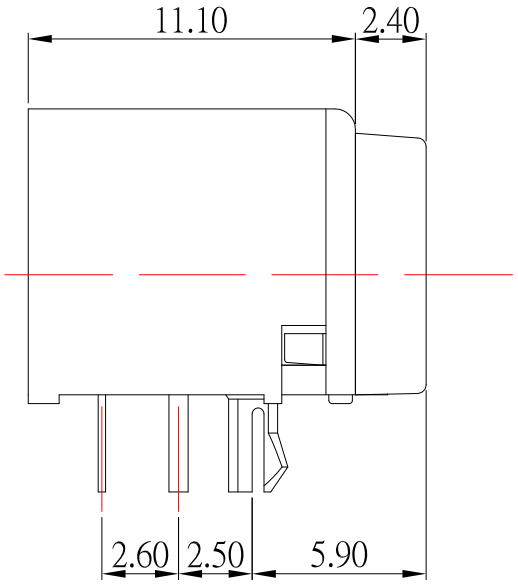

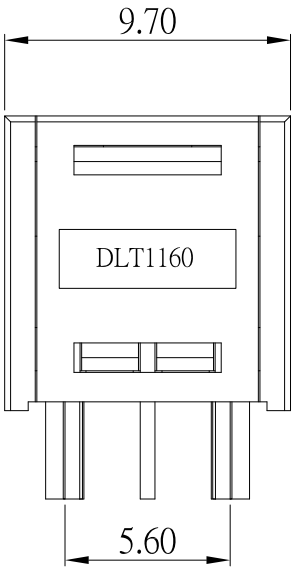

RoHS Compliant

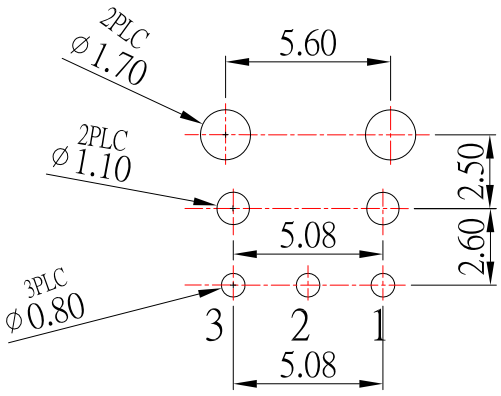

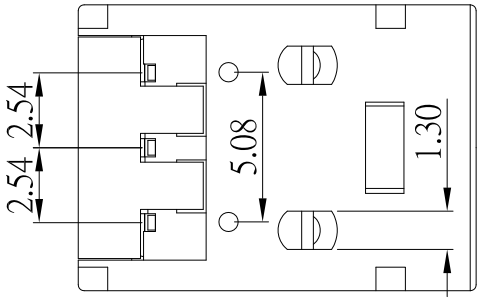

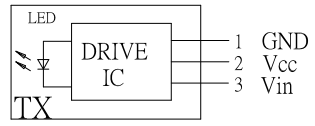

Recommended PCB Layout

ITEM NO.	DESCRIPTION	DRAWN	DATE
7	更新樣式	LAN	042519
6	更新圖面	Jack	041117
5	更新料號	Jack	070116
4	更新為A0版	Jack	051616
3	更新標示	Jack	062014
2	更新圖面	Jack	041014
1	更新料號	Jack	032814

CONTACT 建倚科技股份有限公司
CONTACT TECHNOLOGY CORP.

TOLERANCE UNLESS OTHERWISE STATED : Up to 5 ±0.2; Above 5 ~ 15 ±0.3; Above 15 ~ 30 ±0.4; Above 30 ~ 50 ±0.5; Angle ±0.3°

3RD. ANGEL'S | UNITS | MM

DRAWN BY: Jack Lu	DATE 04/25/19	MAT'L	
CHECKED BY: Jacky Chen	DATE 04/25/19	FINISH	
APPROVED BY: Tony Kao	DATE 04/25/19	SCALE 1 : 1	SHEET NO. 1 of 1

TITLE	JACK		
MODLE	OPTICAL JACK 發射端		
DWG NO.	OJ-D5002E-TX-S214	SIZE	A4
PART NO.	OJ-D5002E-TX-S214	VER	R7