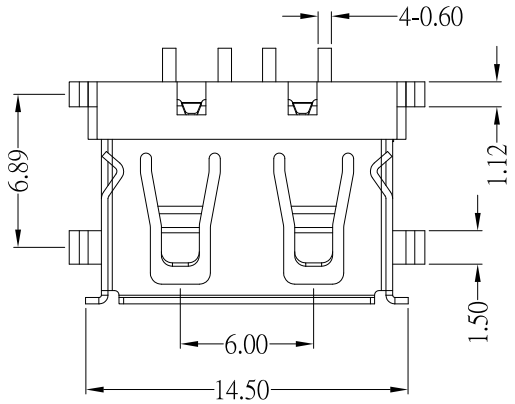

SUA-110M20x-x-S235

Shell Material :

Blank : Phosphor Bronze
I : SPCC

Color :

White : W
Black : B

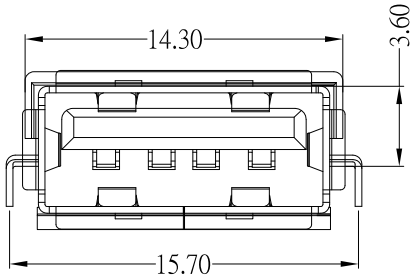

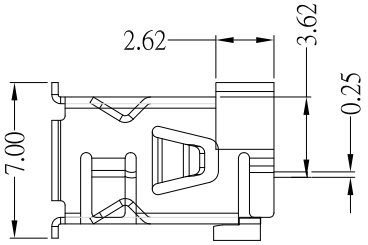

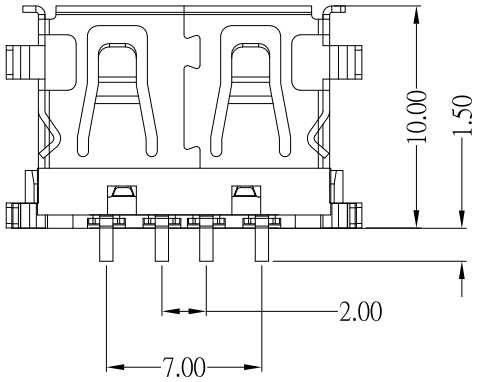

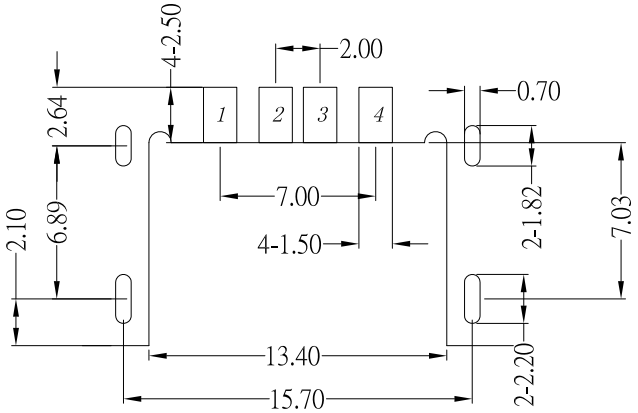

RECOMMENDED PCB LAYOUT

SPECIFICATIONS

Electrical:

1.Current Rating: 2.0 A Max

2.Contact Resistance: 30 mΩ Max

3.Insulation Resistance: 1,000 MΩ Min

4.Dielectric Withstanding Voltage: 500 V DC

Material:

1.Housing: Thermoplastics , UL 94V-0

2.Contact: Phosphor Bronze

3.Shell: Phosphor Bronze / SPCC

Finish:

1.Contact: Plated Gold in Mating Area ;
Tin Plated on Solder Balls ;
Nickel under plated overall

2.Shell: Nickel under Plated surface layer

ITEM NO.	DESCRIPTION	DRAWN	DATE

CONTACT 建倚科技股份有限公司
CONTACT TECHNOLOGY CORP.

TOLERANCE UNLESS OTHERWISE STATED : Up to 5 ±0.2; Above 5 ~ 15 ±0.3; Above 15 ~ 30 ±0.4; Above 30 ~ 50 ±0.5; Angle ±0.3°

3RD. ANGEL'S | UNITS MM

DRAWN BY: Jack Lu	DATE 12/05/14	MAT'L	
CHECKED BY: Jacky Chen	DATE 12/05/14	FINISH	
APPROVED BY: Tony Kao	DATE 12/05/14	SCALE 1 : 1	SHEET NO. 1 of 1

TITLE	CONNECTOR		
MODLE	USB 2.0 AF 短體10.0mm 沉板,有捲邊 SMT		
DWG NO.	SUA-110M20x-x-S235	SIZE	A4
PART NO.	SUA-110M20x-x-S235	VER	R