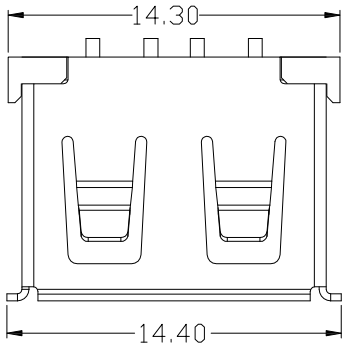

SUA-110M16-x-S236

COLOR :

Black: B
White : W

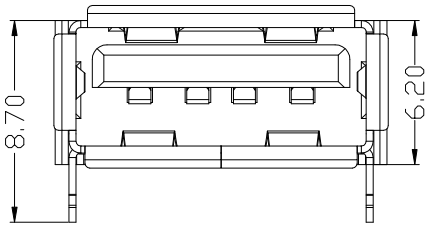

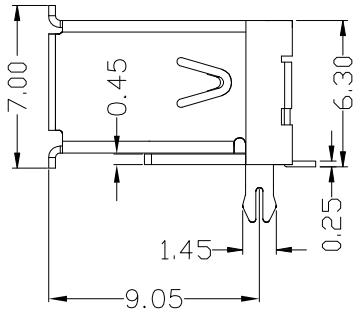

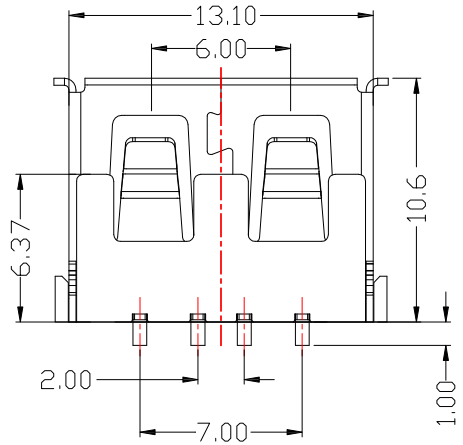

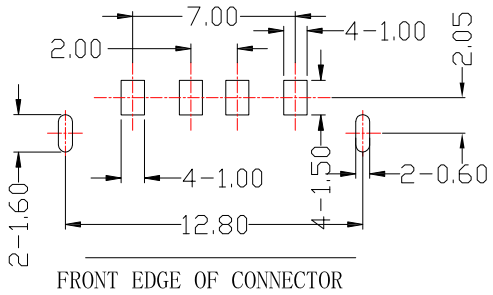

P.C.B LAYOUT MOUNTING PATTERN

SPECIFICATIONS

Electrical:

1.Contact Resistance: 30 mΩ Max

2.Dielectric Withstanding Voltage: 500 V AC FOR 1 MIN

3.Insulation Resistance: 1,000 MΩ Min

4.Operating Temperature: -55˚C ~ 85˚C

Mechanical:

1.Connector Mate and Unmate Force

Mate force: 35N(3.57 kgf) Max

Unmate force: 10~35N(1.02~3.57 kgf) Min

ITEM NO.	DESCRIPTION	DRAWN	DATE

CONTACT 建倚科技股份有限公司 CONTACT TECHNOLOGY CORP.

TOLERANCE UNLESS OTHERWISE STATED : Up to 5 ±0.2; Above 5 ~ 15 ±0.3; Above 15 ~ 30 ±0.4; Above 30 ~ 50 ±0.5; Angle ±0.3°

3RD. ANGEL'S | UNITS MM

DRAWN BY: Jack Lu	DATE 05/12/20	MAT'L	
CHECKED BY: Jacky Chen	DATE 05/12/20	FINISH	
APPROVED BY: Tony Kao	DATE 05/12/20	SCALE 1 : 1	SHEET NO. 1 of 1

TITLE	CONNECTOR		
MODLE	USB A/F 短體10.6 後2 腳,H:6.2 ,SMT腳		
DWG NO.	SUA-110M16-x-S236	SIZE	A4
PART NO.	SUA-110M16-x-S236	VER	R