RoHS Compliant

SUA-110H10x-x-S175

SHELL MATERIAL :

Blank : BRASS
I : SPCC

Color
White : W
Black : B

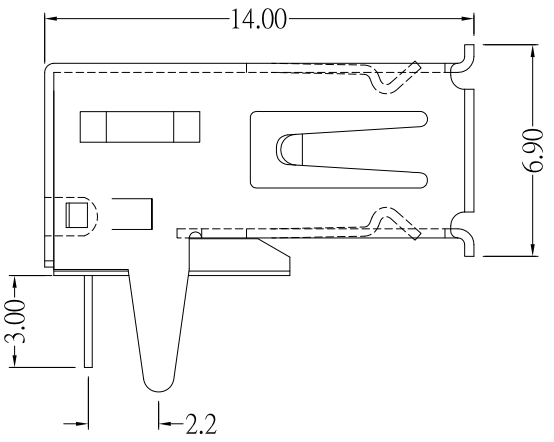

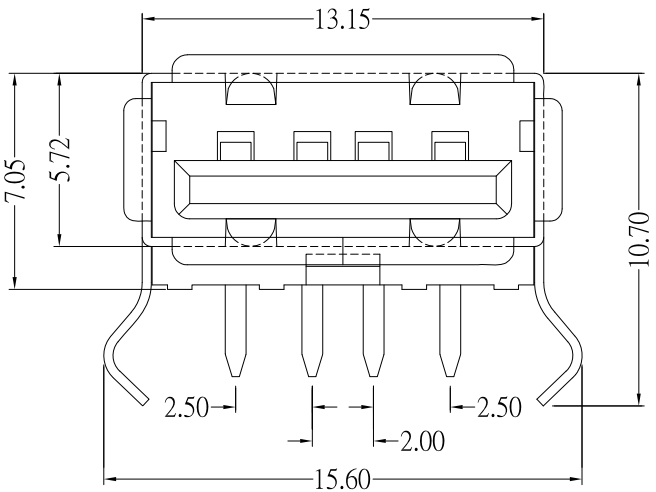

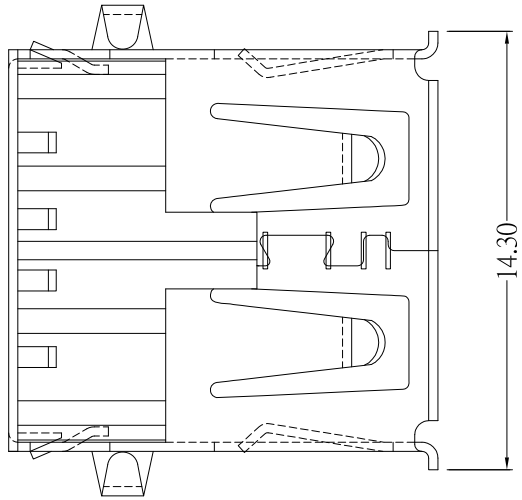

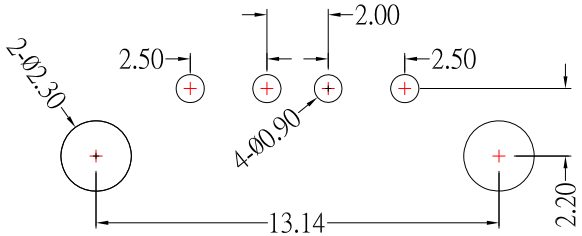

P.C.B LAYOUT MOUNTING PATTERN

SPECIFICATIONS

Electrical:

1.Current Rating: 1.5A / contact terminal

2.Voltage Rating: 30V DC

3.Contact Resistance: 30 mΩ Max

4.Dielectric Withstanding Voltage: 500 V AC AT Sec Level

5.Insulation Resistance: 1,000 MΩ Min

Mechanical:

1.Connector Mate and Unmate Force

Mate force: 3.57 kgf (Max)

Unmate force: 1.02 kgf (Min)

2.Terminal Retention: 1.2 kgf (Min)

Material:

1.Housing: PBT

2.Contact: Brass

3.Shell: Brass / SPCC

Finish:

1.Contact: Plated Gold in Mating Area ;
Tin Plated on Solder Balls
Nickel under plated overall

2.Shell: Nickel under Plated surface layer

ITEM NO.	DESCRIPTION	DRAWN	DATE
1	新增外殼選項	Jack	093015

CONTACT 建倚科技股份有限公司
CONTACT TECHNOLOGY CORP.

TOLERANCE UNLESS OTHERWISE STATED : Up to 5 ±0.2; Above 5 ~ 15 ±0.3; Above 15 ~ 30 ±0.4; Above 30 ~ 50 ±0.5; Angle ±0.3°

3RD. ANGEL'S | UNITS MM

		DATE
DRAWN BY:	Jack Lu	09/30/15
CHECKED BY:	Jacky Chen	09/30/15
APPROVED BY:	Tony Kao	09/30/15

MAT'L		TITLE	CONNECTOR
FINISH		MODLE	USB AF DIP 膠芯反向
SCALE	1 : 1	DWG NO.	SUA-110H10x-x-S175 (SIZE A4)
SHEET NO.	1 of 1	PART NO.	SUA-110H10x-x-S175 (VER R1)