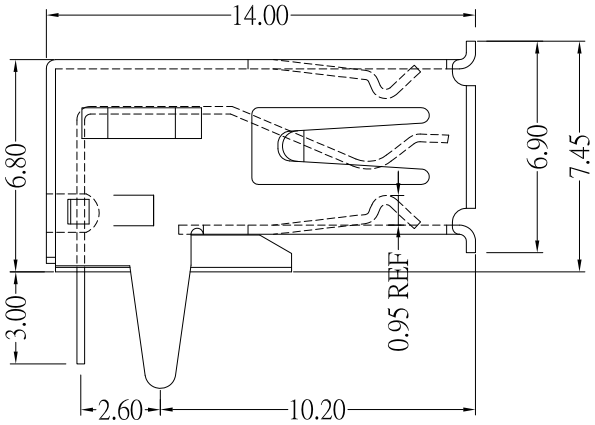


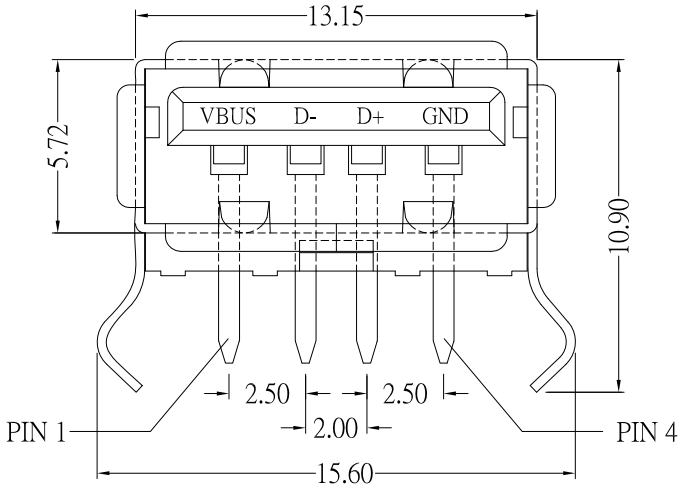


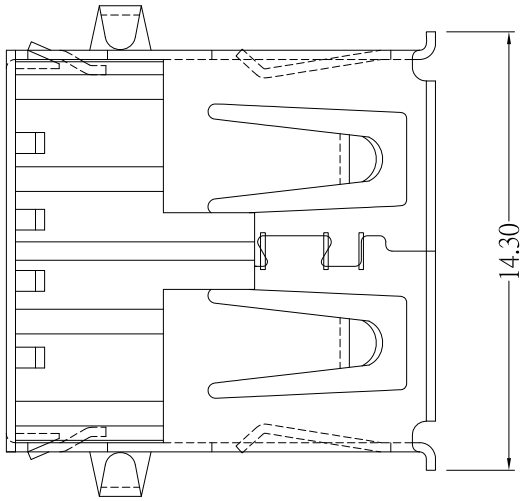


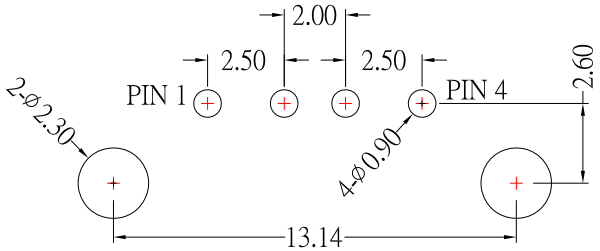


SUA-110H6x-xx-S175

SHELL MATERIAL :

| |
|---|
| Blank : BRASS |
| I : SPCC |

鍍層厚度 :

| |
|---|
| Blank : 1u" |
| 2 : 15u" |
| 3 : 30u" |

Color :

| | |
|---|---|
| B | Black :Housing : LCP |
| W | White:Housing : PBT |
| BL | Blue:Housing : PBT |

## SPECIFICATIONS

**Electrical:**

1.Current Rating: 1.5A / contact terminal

2.Voltage Rating: 30V DC

3.Contact Resistance: 30 milliohms Max

4.Dielectric Withstanding Voltage:

500 V AC AT Sec Level

5.Insulation Resistance: 1000 MEGA ohms Min

6.Operating Temperature: -40˚C~85˚C

**Mechanical:**

1.Connector Mate and Unmate Force

Mate force: 3.57 kgf (Max)

Unmate force: 1.02 kgf (Min)

2.Terminal Retention: 1.2 kgf (Min)

**Material:**

1.Housing:High Temperature Thermal Plastics,

2.Contact: BRASS

3.Shell: BRASS / SPCC

**Finish:**

1.Contact: Plated Gold in Mating Area ;

Tin Plated on Solder Balls ;

Nickel under plated overall

2.Shell: Nickel under Plated surface layer

| ITEM NO. | DESCRIPTION | DRAWN | DATE |
|---|---|---|---|
| 8 | 新增Operating Temperature | Jack | 052418 |
| 7 | 新增PIN電路標示 | Jack | 122016 |
| 6 | 新增PIN標示 | Jack | 102214 |
| 5 | 新增7.45的尺寸 | Jack | 081514 |
| 4 | 新增6.80的尺寸 | Jack | 052714 |
| 3 | 新增10.20的尺寸 | Jack | 051614 |
| 2 | 更新料號及材質和鍍層 | Jack | 112913 |
| 1 | 新增鍍層選項 | Jack | 072613 |
| 10 | 更新顏色材質選項 | Jack | 101620 |
| 9 | 更新Operating Temperature | Jack | 052518 |

CONTACT 建倚科技股份有限公司
CONTACT TECHNOLOGY CORP.

TOLERANCE UNLESS OTHERWISE STATED : Up to 5 ±0.2; Above 5 ~ 15 ±0.3; Above 15 ~ 30 ±0.4; Above 30 ~ 50 ±0.5; Angle ±0.3°

3RD. ANGEL'S | UNITS | MM

| | | | |
|---|---|---|---|
| DRAWN BY: Jack Lu | DATE 10/16/20 | MAT'L | |
| CHECKED BY: Jacky Chen | DATE 10/16/20 | FINISH | |
| APPROVED BY: Tony Kao | DATE 10/16/20 | SCALE 1 : 1 | SHEET NO. 1 of 1 |

| | |
|---|---|
| TITLE | CONNECTOR |
| MODLE | USB AF DIP TYPE |
| DWG NO. | SUA-110H6x-xx-S175 |
| PART NO. | SUA-110H6x-xx-S175 |
| SIZE | A4 |
| VER | A10 |