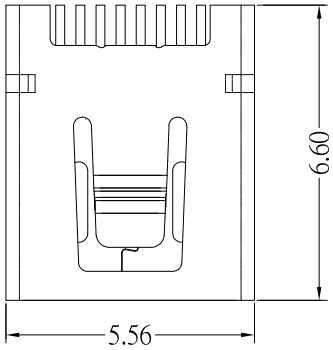

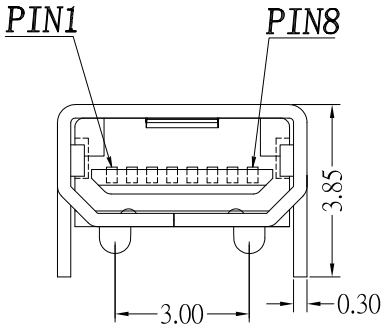

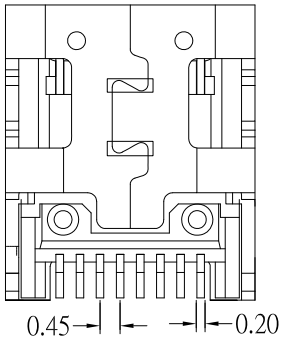

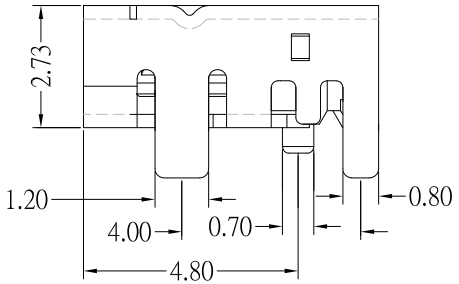

P.C.B LAYOUT MOUNTING PATTERN

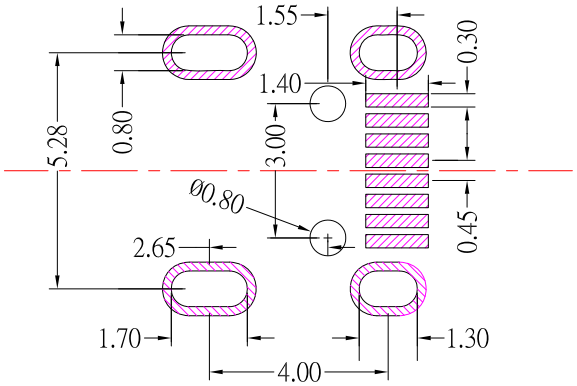

SPECIFICATIONS

Electrical:

1.Current Rating: 1.0A / contact terminal

2.Voltage Rating: 30V DC

3.Contact Resistance: 50 milliohms Max

4.Dielectric Withstanding Voltage:

300 V AC AT Sec Level

5.Insulation Resistance: 1,000 MEGA ohms Min

Mechanical:

1.Connector Mate and Unmate Force

Mate force: 3.0 kgf (Max)

Unmate force: 0.7 kgf (Min)

2.Terminal Retention: 0.5 kgf (Min)

Material:

1.Housing:

High Temperature Thermal Plastics,

UL 94V-0 , LCP , Black

2.Contact: PHOSPHOR BRONZE

3.Shell: BRASS

Finish:

1.Contact: Plated Gold in Mating Area ;
Gold Plated on Solder Balls
Nickel under plated overall

2.Shell: Gold Plating

ITEM NO.	DESCRIPTION	DRAWN	DATE
4	更新鍍層	Jack	102813
3	更新爲A0版	Jack	092413
2	新增外殼腳尺寸	Jack	080713
1	更新SPEC	Jack	041113

CONTACT 建倚科技股份有限公司
CONTACT TECHNOLOGY CORP.

TOLERANCE UNLESS OTHERWISE STATED : Up to 5 ±0.2; Above 5 ~ 15 ±0.3; Above 15 ~ 30 ±0.4; Above 30 ~ 50 ±0.5; Angle ±0.3°

3RD. ANGEL'S | UNITS MM

		DATE
DRAWN BY: Jack Lu		10/28/13
CHECKED BY: Jacky Chen		10/28/13
APPROVED BY: Tony Kao		10/28/13

MAT'L		TITLE	CONNECTOR
FINISH		MODLE	MINI USB 8P/F DIP 4 腳長, 外殼鍍金
SCALE	1 : 1	DWG NO.	MUSB-8B-D-G-S175 SIZE A4
SHEET NO.	1 of 1	PART NO.	MUSB-8B-D-G-S175 VER A1