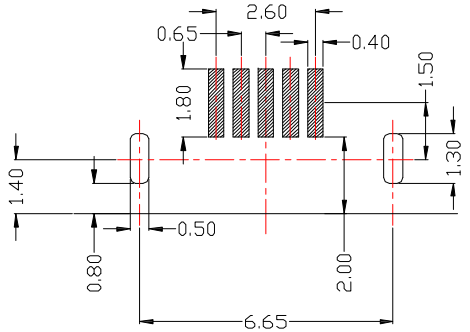


PCB LAYOUT MOUNTING PATTERN

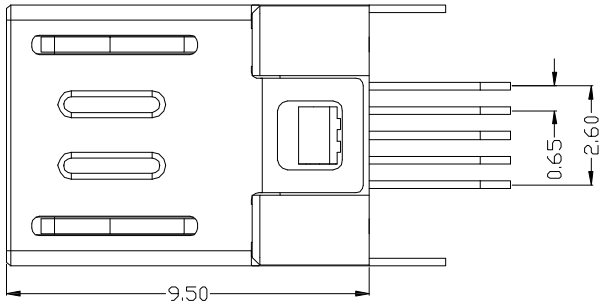


| CONTACT NUMBER | SIGNAL NAME |
|---|---|
| PIN 1 | VBUS |
| PIN 2 | D− |
| PIN 3 | D+ |
| PIN 4 | ID |
| PIN 5 | GND |

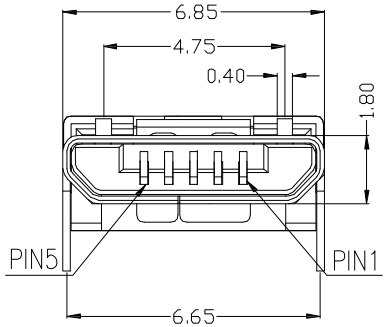


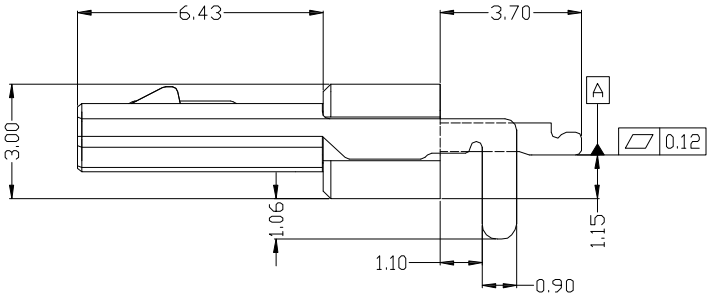


## SPECIFICATIONS

**Electrical:**

1.Current Rating: 1.0A / contact terminal

2.Voltage Rating: 30V DC

3.Contact Resistance: 30 mΩ Max

4.Dielectric Withstanding Voltage: 100 V AC

5.Insulation Resistance: 100 MΩ Min

**Mechanical:**

1.Mate force: 35N (Max)

2.Withdrawal force: 8N (Min) , initial

**Material:**

1.Hook: SUS 301

2.Contact: Phosphor Bronze

3.Shell: SUS 301

4.Insulator: Temperature Thermal Plastics,UL94V-0

**Finish:**

1.Contact: Plated Gold in Mating Area ;
Tin Plated on Solder Balls ;
Nickel under plated overall

2.Shell: Nickel under Plated surface layer

| ITEM NO. | DESCRIPTION | DRAWN | DATE |
|---|---|---|---|

CONTACT 建倚科技股份有限公司
CONTACT TECHNOLOGY CORP.

TOLERANCE UNLESS OTHERWISE STATED : Up to 5 ±0.2; Above 5 ~ 15 ±0.3; Above 15 ~ 30 ±0.4; Above 30 ~ 50 ±0.5; Angle ±0.3°

3RD. ANGEL'S | UNITS MM

| | | | |
|---|---|---|---|
| DRAWN BY: Jack Lu | DATE 04/01/15 | MAT'L | |
| CHECKED BY: Jacky Chen | DATE 04/01/15 | FINISH | |
| APPROVED BY: Tony Kao | DATE 04/01/15 | SCALE 1 : 1 | SHEET NO. 1 of 1 |

| | | | |
|---|---|---|---|
| TITLE | CONNECTOR | | |
| MODLE | MICRO USB 5P/M 板端 SMT TYPE | | |
| DWG NO. | MRUSB-5PLM-S306 | SIZE | A4 |
| PART NO. | MRUSB-5PLM-S306 | VER | R |