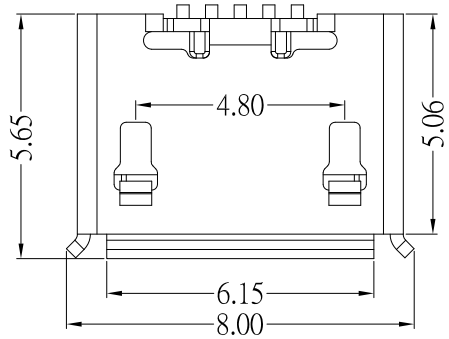

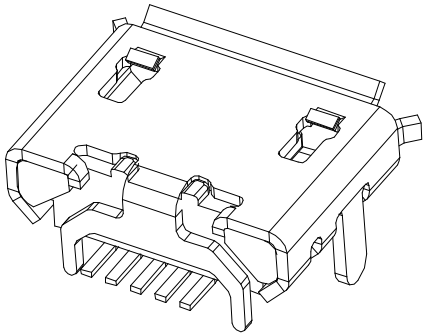

Pin Assignments

Contact No.	Signal Name
1	VBUS
2	D−
3	D+
4	ID
5	GND

MRUSB-5B-D3x-S347

SHELL鍍層:

TN
NI

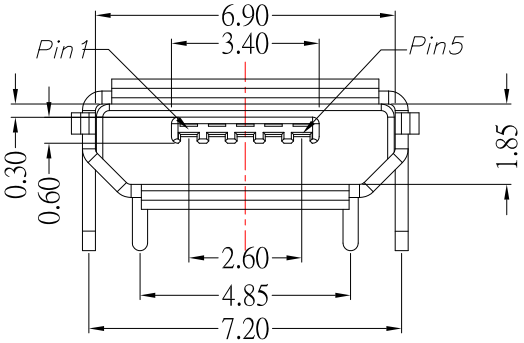

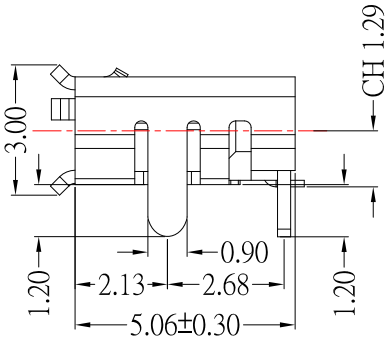

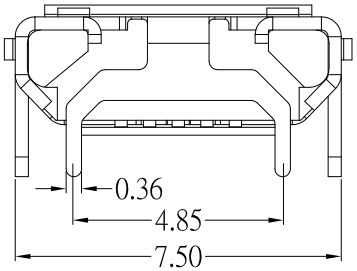

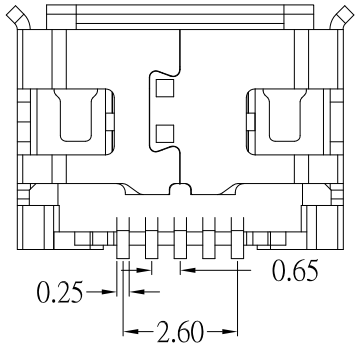

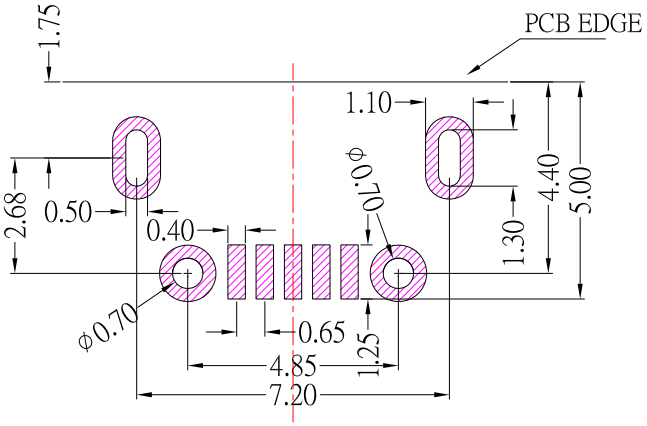

P.C.B LAYOUT MOUNTING PATTERN

NOTES:

MATERIAL:

1.1 HOUSING: LCP,UL94V-0

1.2 CONTACT: PHOSPHOR BRONZE

1.3 SHELL: BRASS

Finish:

2.1 Contact: Plated Gold in Mating Area ;
Gold Plated on Solder Balls
Nickel under plated overall

2.2 Shell: Nickel or Tin under Plated surface layer

3.SPECIFICATION:

3.1 CURRENT RATING: 1.0 A MAX

3.2 DIELECTRIC WITHSSTANDING VOLTAGE: 100 V(ac) FOR 1min

3.3 CONTACT RESISTANCE: 50 mΩ MAX.

3.4 INSULATION RESISTANCE: 100 MΩ MIN.

3.5 TOTAL MATING FORCE: 3.57 Kgf MAX.

3.6 TOTAL UNMATING FORCE: 1.0 Kgf MIN.

3.7 TEMPERATURE RANGE: -30˚C ~ +80˚C

ITEM NO.	DESCRIPTION	DRAWN	DATE
6	新增尺寸	Jack	071922
5	新增PIN定義	Jack	071122
4	刪除尺寸	Jack	022321
3	新增PCB LAYOUT尺寸	Jack	052220
2	更新材質	Jack	033117
1	新增尺寸	Jack	101916

CONTACT 建倚科技股份有限公司
CONTACT TECHNOLOGY CORP.

TOLERANCE UNLESS OTHERWISE STATED : Up to 5 ±0.2; Above 5 ~ 15 ±0.3; Above 15 ~ 30 ±0.4; Above 30 ~ 50 ±0.5; Angle ±0.3˚

3RD. ANGEL'S | UNITS | MM

DRAWN BY: Jack Lu	DATE 07/19/22	MAT'L	
CHECKED BY: Jacky Chen	DATE 07/19/22	FINISH	
APPROVED BY: Tony Kao	DATE 07/19/22	SCALE 1 : 1	SHEET NO. 1 of 1

TITLE	CONNECTOR
MODLE	MICRO USB 4 腳全插(牛角型) 無柱 腳距2.68 腳長 1.2mm
DWG NO.	MRUSB-5B-D3x-S347
PART NO.	MRUSB-5B-D3x-S347
SIZE	A4
VER	R6