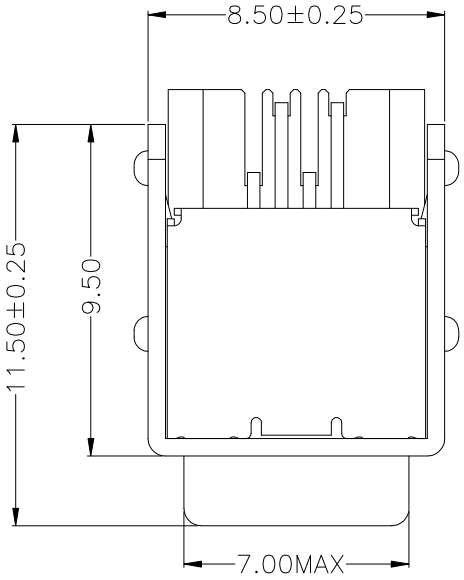

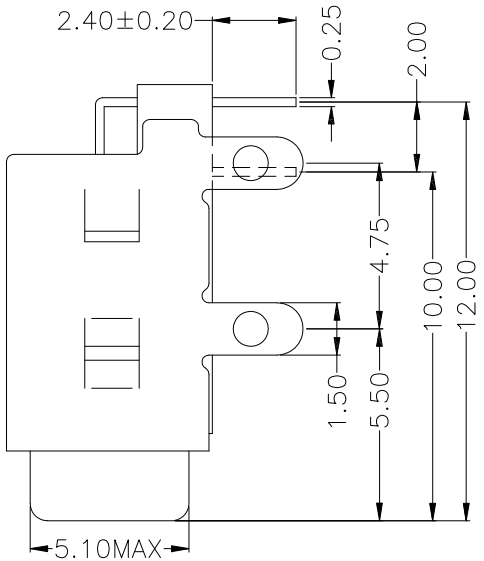

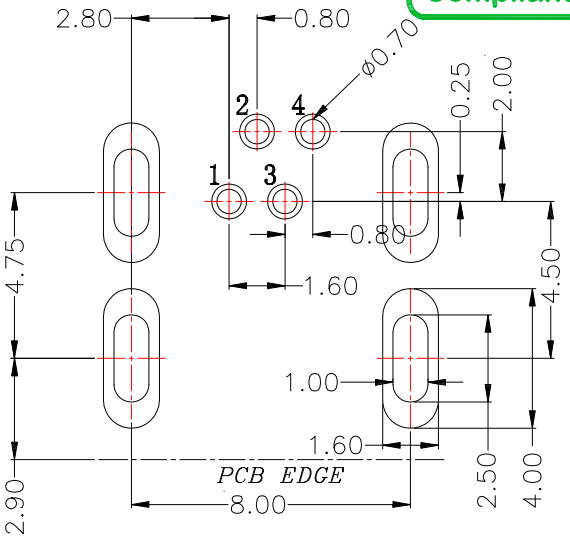

P.C.B LAYOUT MOUNTING PATTERN

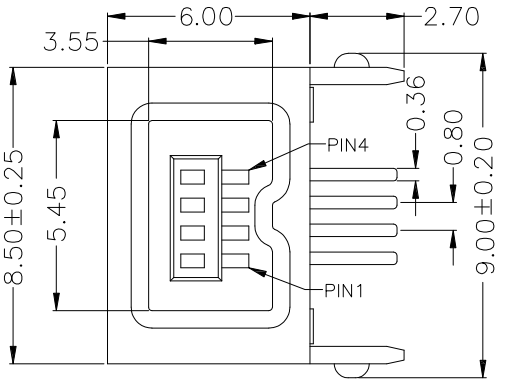

Material:

1.Housing: LCP , Black

2.Contact: Copper Alloy

3.Shell: Copper Alloy / Steel

4.Cover: SUS

Finish:

1.Contact: Plated Gold in Mating Area ;

Tin Plated on Solder Balls

Nickel under plated overall

2.Shell: Nickel under Plated surface layer

ITEM NO.	DESCRIPTION	DRAWN	DATE
1	更新尺寸	Jack	120219

CONTACT 建倚科技股份有限公司
CONTACT TECHNOLOGY CORP.

TOLERANCE UNLESS OTHERWISE STATED : Up to 5 ±0.2; Above 5 ~ 15 ±0.3; Above 15 ~ 30 ±0.4; Above 30 ~ 50 ±0.5; Angle ±0.3°

3RD. ANGEL'S

UNITS MM

DRAWN BY: Jack Lu	DATE 12/02/19	MAT'L	
CHECKED BY: Jacky Chen	DATE 12/02/19	FINISH	
APPROVED BY: Tony Kao	DATE 12/02/19	SCALE 1 : 1	SHEET NO. 1 of 1

TITLE	CONNECTOR		
MODLE	1394 4P/Female DIP TYPE		
DWG NO.	SUC-1394H-4P-S304	SIZE	A4
PART NO.	SUC-1394H-4P-S304	VER	R1