

□3.5 MATE PLUG

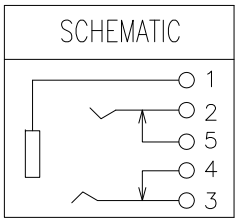

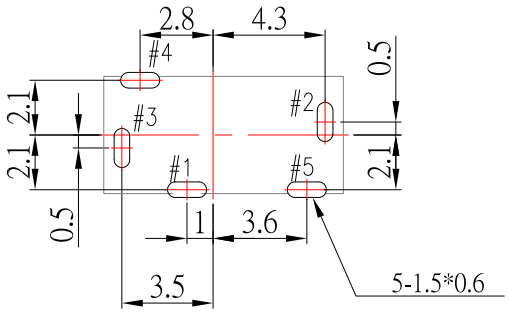

P.C.B LAYOUT
TOP VIEW

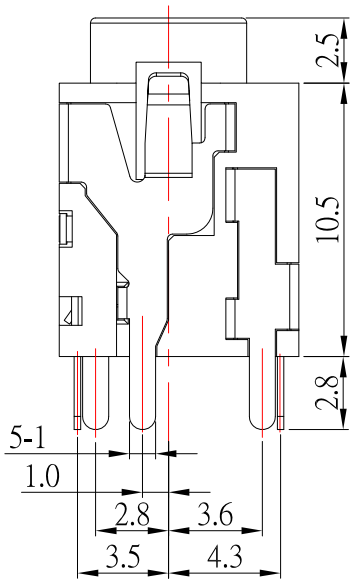

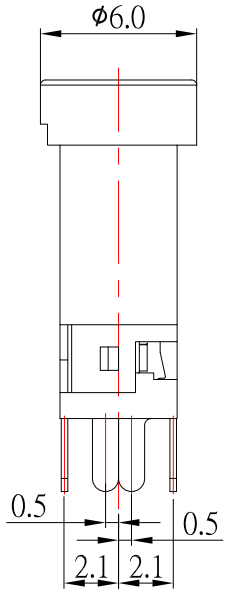

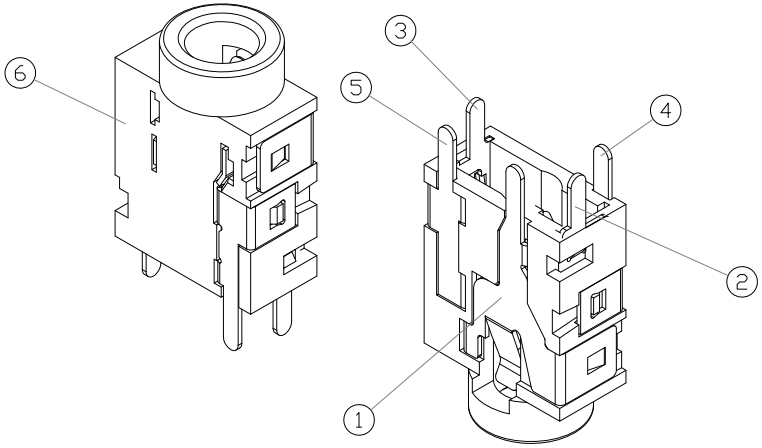

Notes:
1. Electrical Characteristics:
 1-1.Rating ：DC 30V, 0.5 A；
 1-2.Contact Resistance: 50mΩ Max.(Initial),
 100mΩ Max.(Final) After test:≤50mΩ；
 1-3.Dielectric Withstanding Voltage: 500V AC for One Minute；
 1-4. Insulation Resistance: 100MΩ Min. Measured By 500 VDC
2. Mechanical Characteristics:
 2-1. Plug Insertion Force 0.3~3.0Kgf (initial),
 0.3~3.0Kgf (Final) life test;
 2-2. Plug Extraction Force: 0.3~3.0Kgf (initial),
 0.3~3.0Kgf (Final) life test;
3. Durability Test: 5,000 Cycles min;
4. Operating temperature:-25℃ ~ +70℃;

LTR	PART NAME	QTY	MATERIAL	REMARK
⑥	HOUSING	1	PA66	BLACK
⑤	TERMINAL 5#	1	C2680	MB:Ni Ag PLATED
④	TERMINAL 4#	1	C2680	MB:Ni Ag PLATED
③	TERMINAL 3#	1	C5191	MB:Ni Ag PLATED
②	TERMINAL 2#	1	C5191	MB:Ni Ag PLATED
①	TERMINAL 1#	1	C5191	MB:Ni Ag PLATED

ITEM NO.	DESCRIPTION	DRAWN	DATE
1	更新圖面	Jack	122818

CONTACT 建倚科技股份有限公司
CONTACT TECHNOLOGY CORP.

TOLERANCE UNLESS OTHERWISE STATED : Up to 5 ±0.2; Above 5 ~ 15 ±0.3; Above 15 ~ 30 ±0.4; Above 30 ~ 50 ±0.5; Angle ±0.3°
3RD. ANGEL'S
UNITS MM

DRAWN BY: Jack Lu	DATE 12/28/18	MAT'L	
CHECKED BY: Jacky Chen	DATE 12/28/18	FINISH	
APPROVED BY: Tony Kao	DATE 12/28/18	SCALE 1 : 1	SHEET NO. 1 of 1

TITLE	JACK		
MODLE	PHONE JACK		
DWG NO.	PJ-3935-S214	SIZE	A4
PART NO.	PJ-3935-S214	VER	R1