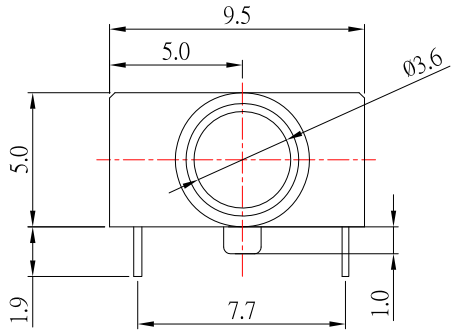

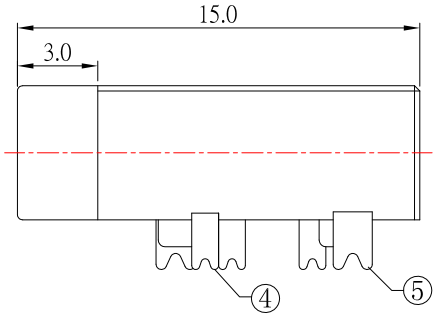

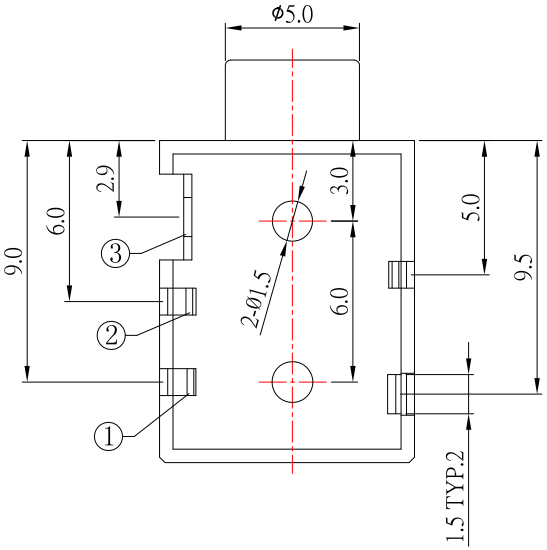

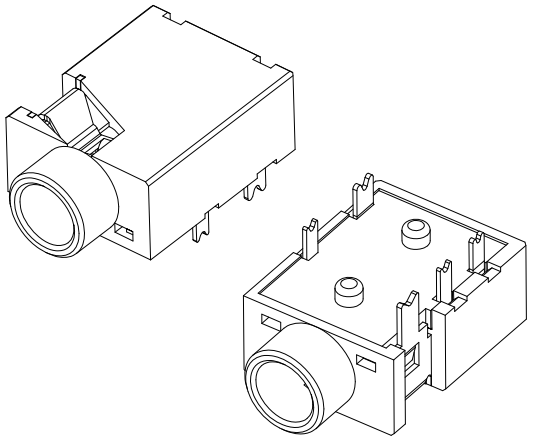

P.C.B LAYOUT
TOP VIEW

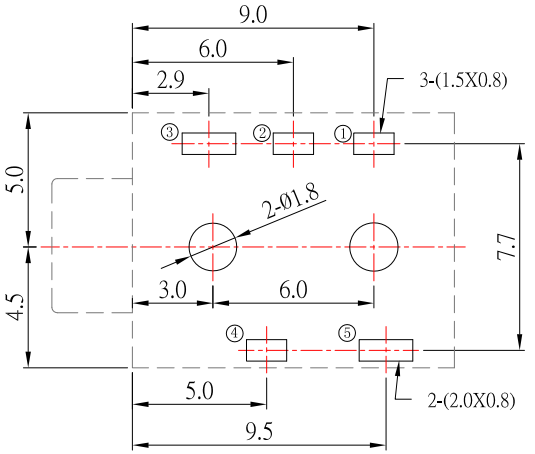

SCHEMATIC

PJ-3675-S125	PJ-3674B-S125	PJ-3674A-S125	PJ-3673-S125	PJ-3673A-S125
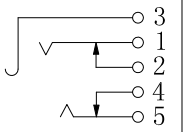	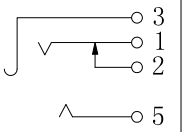	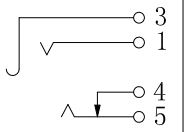	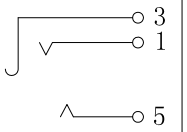	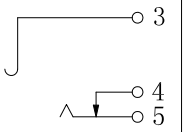

SPECIFICATION

1.Rating ：DC 30V 0.5A；

2.Contact resistance：≤0.05Ω ；

3.Insulation resistance：≥100MΩ (DC250V)；

4.Withstand voltage：500VAC ；

5.Insertion and extraction force：3-20N;

6.life test：5,000 cycles。

ITEM NO.	DESCRIPTION	DRAWN	DATE

CONTACT 建倚科技股份有限公司
CONTACT TECHNOLOGY CORP.

TOLERANCE UNLESS OTHERWISE STATED : Up to 5 ±0.2; Above 5 ~ 15 ±0.3; Above 15 ~ 30 ±0.4; Above 30 ~ 50 ±0.5; Angle ±0.3°

3RD. ANGEL'S | UNITS MM

DRAWN BY: Jack Lu	DATE 04/23/13	MAT'L		TITLE	JACK		
CHECKED BY: Jacky Chen	DATE 04/23/13	FINISH		MODLE	PHONE JACK		
APPROVED BY: Tony Kao	DATE 04/23/13	SCALE	1 : 1	DWG NO.	PJ-367x-S125	SIZE	A4
		SHEET NO.	1 of 1	PART NO.	PJ-367x-S125	VER	A0