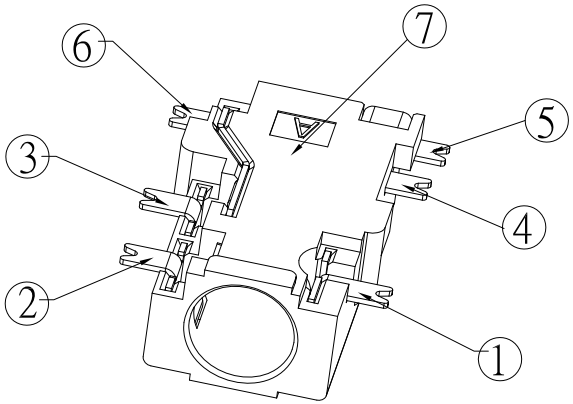

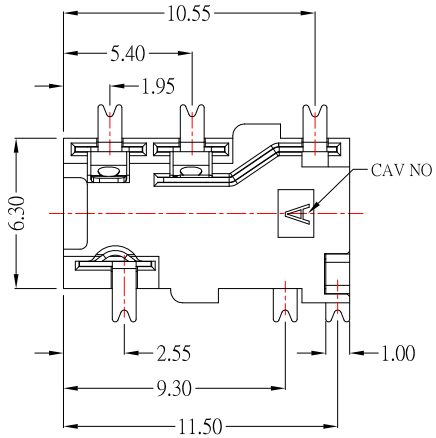

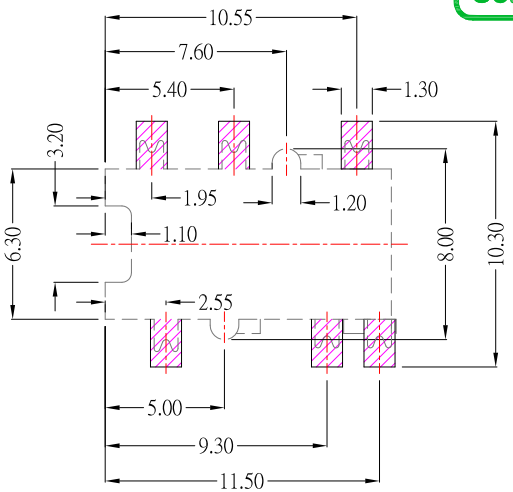

P.C.B LAYOUT
TOP VIEW

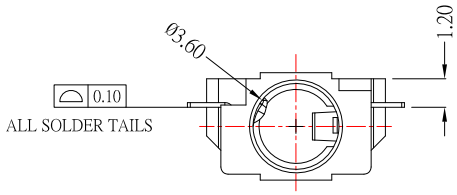

SCHEMATIC

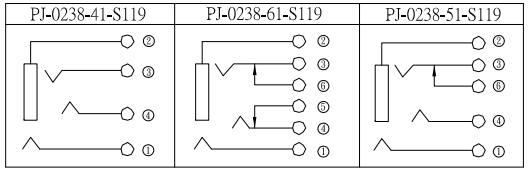

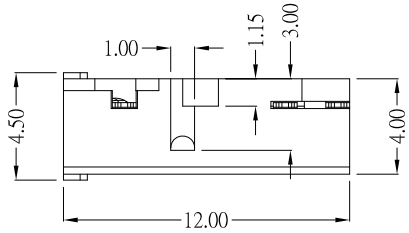

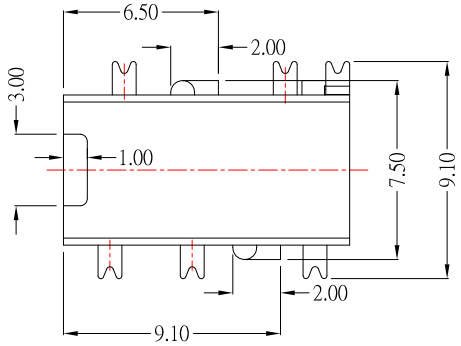

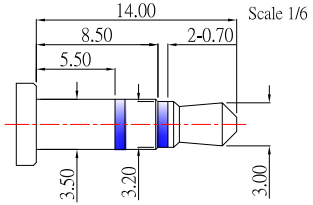

(Ø3.50 3 POLE PLUG DETAIL DRAWING)

RoHS Compliant

SPECIFICATIONS:

1. CONTACT CURRENT RATING: 0.5A.
2. CONTACT RESISTANCE: 50 mΩ MAX.;
3. INSULATION RESISTANCE: 100MΩ MIN.;
4. DIELECTRIC WITHSTANDING: 500V AC MIN.;
5. CONNECTOR MATING FORCES: 29.4N (3.00Kgf) MAX.;
6. CONNECTOR UNMATING FORCES: 2.94N(0.30Kgf) MIN.

ITEM	PART NAME	Q'TY	MATERTAL	REMARK
⑦	HOUSING	1	HIGHT TEMPERATURE PLASTIC	
⑥	CONTACT F1	1	BRASS	
⑤	CONTACT E1	1	BRASS	
④	CONTACT D1	1	BeCu	
③	CONTACT C1	1	BeCu	
②	CONTACT C1	1	BeCu	
①	CONTACT B	1	PHOSPHOR BRONZE	

ITEM NO.	DESCRIPTION	DRAWN	DATE
2	更新料號選項	Jack	122314
1	更新爲A0版	Jack	010914

CONTACT 建倚科技股份有限公司
CONTACT TECHNOLOGY CORP.

TOLERANCE UNLESS OTHERWISE STATED: Up to 5 ±0.2; Above 5 ~ 15 ±0.3; Above 15 ~ 30 ±0.4; Above 30 ~ 50 ±0.5; Angle ±0.3°

3RD. ANGEL'S | UNITS MM

		DATE
DRAWN BY:	Jack Lu	12/23/14
CHECKED BY:	Jacky Chen	12/23/14
APPROVED BY:	Tony Kao	12/23/14

MAT'L		TITLE	JACK
FINISH		MODLE	PHONE JACK
SCALE	1 : 1	DWG NO.	PJ-0238-xx-S119
SHEET NO.	1 of 1	PART NO.	PJ-0238-xx-S119

SIZE A4 | VER A1