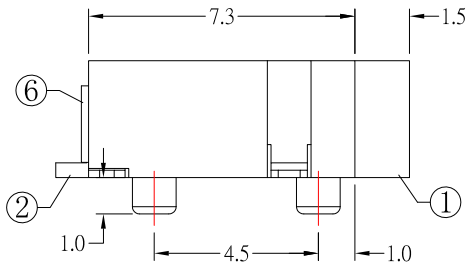

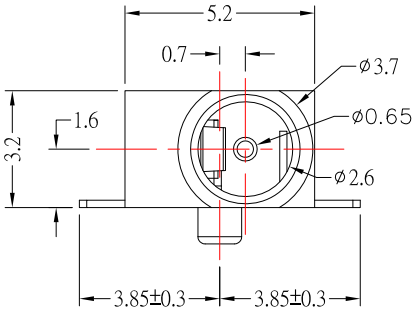

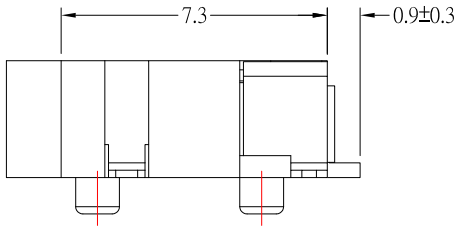

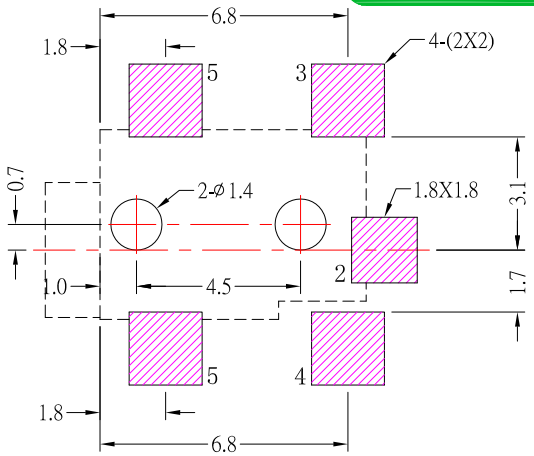

P.C.B LAYOUT MOUNTING PATTERN
(TOP VIEW)

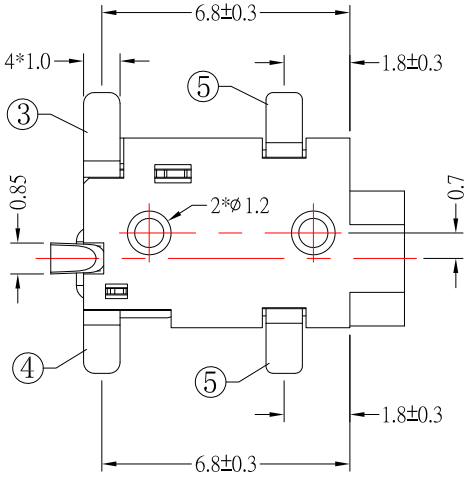

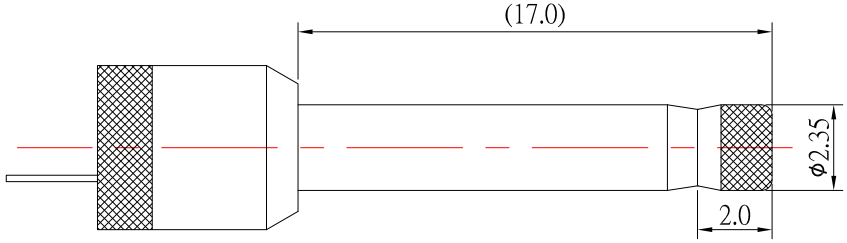

RECOMMENDED PLUG

SPECIFICATION

1.Rating ：DC 16V , 1.0A
2.Contact resistance：≤ 50mΩ
3.Insulation resistance：≥100MΩ
4.Withstand voltage：500VAC
5.Insertion and extraction force：3-30N
6.life test：5,000 cycles。

MODEL NO.	DC-065D-0.65
SCHEMATIC	2 (+), 4, 3 (−)

NO.	DESCRIPTION	QTY	MATERIAL	PLATING
6	STOPPER	1	BRASS	Ag-Plating
5	SUPPORT	2	BRASS	Ag-Plating
4	CONTACT FOOT	1	BRASS	Ag-Plating
3	SPRING	1	PHOSPHOR BRONZE	Ag-Plating
2	PIN	1	BRASS	Ag-Plating
1	HOUSING	1	PA10T	

ITEM NO.	DESCRIPTION	DRAWN	DATE
3	更新HOUSING材質	Jack	081523
2	更新底部樣式	Jack	111722
1	更新料號	Jack	111622

CONTACT 建倚科技股份有限公司
CONTACT TECHNOLOGY CORP.

TOLERANCE UNLESS OTHERWISE STATED : Up to 5 ±0.2; Above 5 ~ 15 ±0.3; Above 15 ~ 30 ±0.4; Above 30 ~ 50 ±0.5; Angle ±0.3°

3RD. ANGEL'S | UNITS MM

DRAWN BY: Jack Lu	DATE 08/15/23	MAT'L	
CHECKED BY: Jacky Chen	DATE 08/15/23	FINISH	
APPROVED BY: Tony Kao	DATE 08/15/23	SCALE 1 : 1	SHEET NO. 1 of 1

TITLE	JACK
MODLE	DC JACK
DWG NO.	DC-065D-0.65-S124
PART NO.	DC-065D-0.65-S124
SIZE	A4
VER	R3